PARTS LIST

トーハツ船外機
パーツ　リスト

TOHATSU

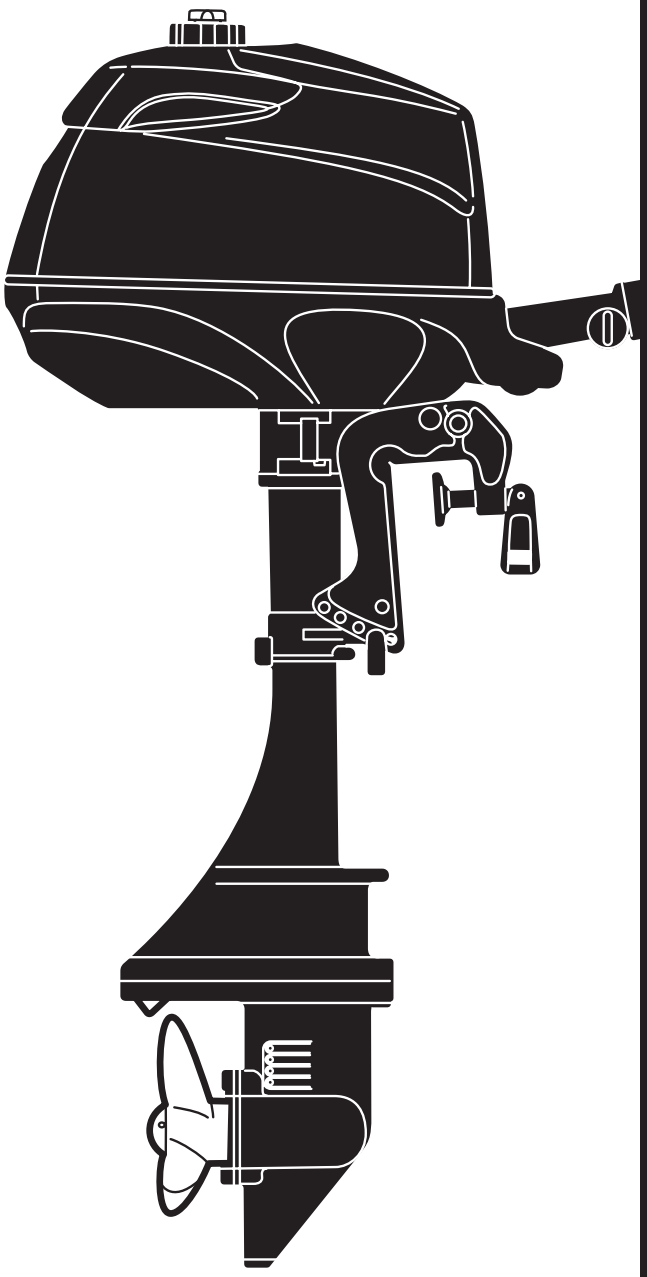

MFS 2B
2.5B
3.5B

OB NO.002-21052-1
0910 NB 3,000

パーツリストのご使用について

1. このパーツリストは、トーハツ船外機を構成している部品を収録したものです。

2. 部品の新設、廃止または、変更が生じた場合は、インフォメーション等にてお知らせ致しますので、その都度、ご訂正ください。

3. アッセンブリまたは、キットでの販売部品は、その構成する部品の頭に（＊）印をつけて表わしています。

4. 本文中に記載されている記号は次の様になっています。
   AR：必要に応じて選択　　Ass'y：アッセンブリ

5. オーダー上の注意
   塗装部品の注文に当たっては、以下に従ってください。
   パーツナンバの 4 桁目が“B”・“Q”記号のものは塗装されています。現在の塗装色はパワーヘッドがブラック (B)、ロワユニットがアクアマリンブルー (Q) です。

   例示 -1：パワーヘッド部品
   3ABB01100-0
   ブラック

   例示 -2：ロワーユニット部品
   3ABQ61020-0
   アクアマリンブルー

6. 備考欄に“UNIQUE”もしくは“N. A. F. N.”と記されている部品がありますが、特に関係ありません。

HOW TO USE THIS PARTS LIST

1. This Parts List contains the component parts of the Tohatsu outboard motors.

2. Please keep the Parts List updated each time when receiving the Service Bulletin describing the addition, abolition and/or change of parts.

3. Given mark in (∗) to part number shows assembly or kit part.

4. Marks in this Parts List show.

   AR : As required　　Ass'y : Assembly

5. Attention to order

   Please order painted parts in accordance with following. The parts that fourth figure of the parts number is "B" or "Q" have painted.

[Example]

POWER HEAD PARTS	LOWER UNIT PARTS
3ABB01100-0	3ABQ61020-0
Black	Aquamarine Blue

6. You don't care that the "UNIQUE" or the "N.A.F.N." parts written in the Remarks column.

目　　次

CONTENTS

Fig. 1	シリンダ・クランクケース CYLINDER-CRANKCASE	1
Fig. 2	ピストン & クランクシャフト PISTON & CRANKSHAFT	3
Fig. 3	キャブレタ CARBURETOR	5
Fig. 4	オイルパン OIL PAN	9
Fig. 5	カムシャフト & バルブ CAMSHAFT & VALVE	11
Fig. 6	マグネト MAGNETO	13
Fig. 7	ティラハンドル & スロットル TILLER HANDLE & THROTTLE	15
Fig. 8	リコイルスタータ RECOIL STARTER	17
Fig. 9	ドライブシャフトハウジング & ギヤケース DRIVE SHAFT HOUSING & GEAR CASE	19
Fig. 10	ギヤケース（ドライブシャフト） GEAR CASE (DRIVE SHAFT)	21
Fig. 11	ギヤケース（プロペラシャフト） GEAR CASE (PROPELLER SHAFT)	23
Fig. 12	シフト SHIFT	25
Fig. 13	クランプブラケット & スイベルブラケット CLAMP BRACKET & SWIVEL BRACKET	27
Fig. 14	インテグラルフュエルタンク INTEGRAL FUEL TANK	31
Fig. 15	カウル COWL	33
Fig. 16	オプショナルパーツ & アクセサリー OPTIONAL PARTS & ACCESSORIES	35
Fig. 17	アッセンブリキット ASSEMBLY KIT	37

シリンダ・クランクケース
Fig. 1 CYLINDER-CRANKCASE

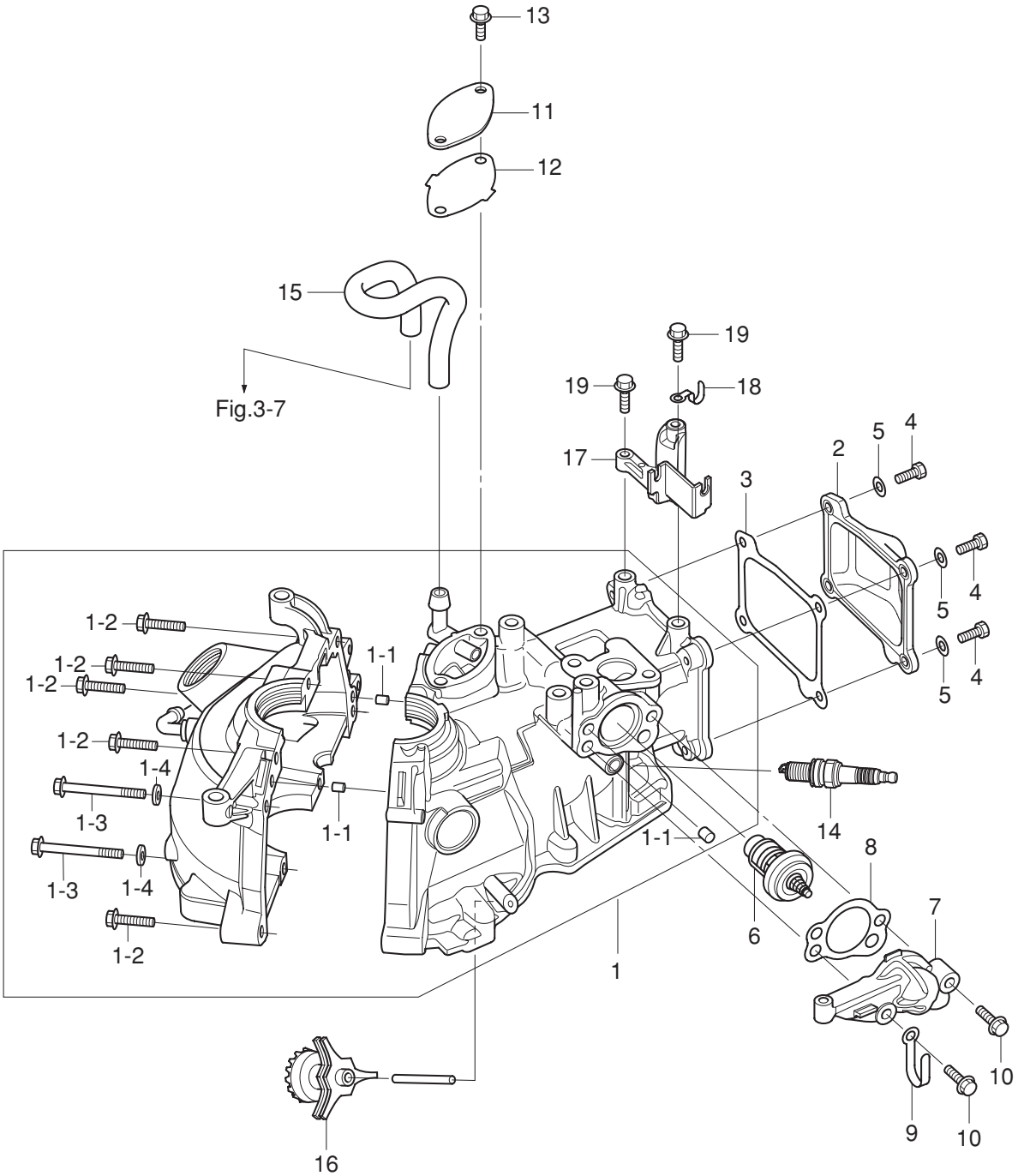

見出番号 Ref. No.	部品番号 Part No.	部　品　名 Description	個数 Q'ty F 3.5 B	F 2.5 B	F 2 B	備　考 Remarks
1-1	3GTB01100-1	ｼﾘﾝﾀﾞｰ･ｸﾗﾝｸｹｰｽ Cylinder-Crankcase	1	1	1	3.5B/2.5B/2B～ with Nipple
	3ABB01100-2	ｼﾘﾝﾀﾞｰ･ｸﾗﾝｸｹｰｽ (旧) Cylinder-Crankcase (Old)	(1)	(1)	(1)	3.5A/2.5A/2A with Nipple
1-1-1	345-01111-0	ﾀﾞｳｴﾙﾋﾟﾝ、6-12 ＊ Dowel Pin, 6-12	3	3	3	
1-1-2	9101F4-5635	ﾎﾞﾙﾄ ＊ Bolt	6	6	6	or 910114-5635
1-1-3	9161F9-0675	ﾎﾞﾙﾄ ＊ Bolt	2	2	2	or 916119-0675
1-1-4	9401E3-0600	ﾜｯｼｬ ＊ Washer	2	2	2	or 940113-0600
1-2	3ABB01021-0	ｼﾘﾝﾀﾞｰﾍｯﾄﾞｶﾊﾞｰ Cylinder Head Cover	1	1	1	
1-3	3AB-01024-1	ｼﾘﾝﾀﾞｰﾍｯﾄﾞｶﾊﾞｰｶﾞｽｹｯﾄ Cylinder Head Cover Gasket	1	1	1	
1-4	910121-0616	ﾎﾞﾙﾄ Bolt	4	4	4	or 910103-0616
1-5	3C8-66308-0	ﾜｯｼｬ、6-16-1.5 Washer, 6-16-1.5	4	4	4	
1-6	3H6-01030-0	ｻｰﾓｽﾀｯﾄ Thermostat	1	1	1	Mark: 5B or 52B
1-7	3ABB01031-0	ｻｰﾓｽﾀｯﾄｷｬｯﾌﾟ Thermostat Cap	1	1	1	
1-8	3AB-01032-0	ｻｰﾓｽﾀｯﾄｷｬｯﾌﾟｶﾞｽｹｯﾄ Thermostat Cap Gasket	1	1	1	
1-9	398-06972-0	ｸﾗﾝﾌﾟ、6.5-67P Clamp, 6.5-67P	1	1	1	
1-10	9101E3-5630	ﾎﾞﾙﾄ Bolt	2	2	2	or 910113-5630
1-11	3AB-07431-0	ﾌﾞﾘｰｻﾞﾁｬﾝﾊﾞｶﾊﾞｰ Breather Chamber Cover	1	1	1	
1-12	3AB-07432-0	ﾌﾞﾘｰｻﾞﾁｬﾝﾊﾞｶﾊﾞｰｶﾞｽｹｯﾄ Breather Chamber Cover Gasket	1	1	1	
1-13	9101E3-5616	ﾎﾞﾙﾄ Bolt	2	2	2	or 910113-5616
1-14	9701-1-1103	ｽﾊﾟｰｸﾌﾟﾗｸﾞ Spark Plug	1	1	1	NGK: DCPR6E
1-15	3AB-07435-0	ﾌﾞﾘｰｻﾞﾎｰｽ Breather Hose	1	1	1	
1-16	3AB-07640-0	ｽﾘﾝｶﾞ Slinger	1	1	1	
1-17	3ABB63508-0	ｽﾛｯﾄﾙﾜｲﾔﾌﾞﾗｹｯﾄ Throttle Cable Bracket	1	1	1	
1-18	398-06972-0	ｸﾗﾝﾌﾟ、6.5-67P Clamp, 6.5-67P	1	1	1	
1-19	9101E3-5625	ﾎﾞﾙﾄ Bolt	2	2	2	or 910113-5625

ピストン & クランクシャフト
Fig. 2 PISTON & CRANKSHAFT

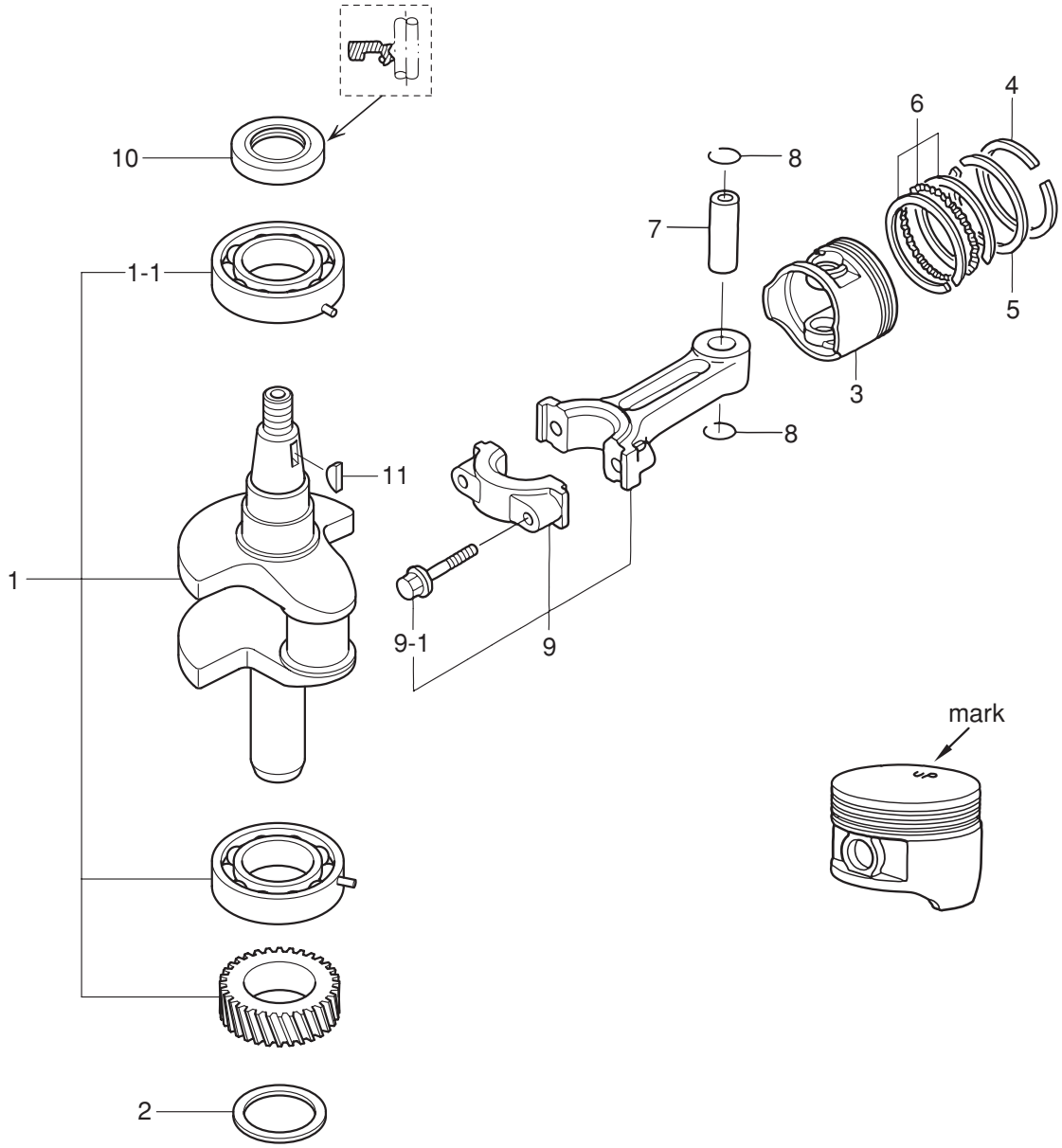

見出番号 Ref. No.	部品番号 Part No.	部　品　名 Description	個数 Q'ty F 3.5 B	F 2.5 B	F 2 B	備　考 Remarks
2-1	3AB-00070-0	ｸﾗﾝｸｼｬﾌﾄｱｯｼ Crankshaft Ass'y	1	1	1	with Gear
2-1-1	9603-3-6204	ﾎﾞｰﾙﾍﾞｱﾘﾝｸﾞ、6204 ＊ Ball Bearing, 6204	1	1	1	
2-2	3AB-00115-0	ｽﾗｽﾄﾌﾟﾚｰﾄ、20.2-32-1 Thrust Plate, 20.2-32-1	1	1	1	
2-3	3AB-00001-1	ﾋﾟｽﾄﾝ Piston	1	1	1	
2-4	3V1-00011-0	ﾋﾟｽﾄﾝﾘﾝｸﾞ ﾄｯﾌﾟ Piston Ring Top	1	1	1	
2-5	3V1-00012-0	ﾋﾟｽﾄﾝﾘﾝｸﾞ 2nd Piston Ring 2nd	1	1	1	
2-6	3V1-00013-0	ﾋﾟｽﾄﾝﾘﾝｸﾞ ｵｲﾙ Piston Ring Oil	1	1	1	
2-7	332-00021-1	ﾋﾟｽﾄﾝﾋﾟﾝ Piton Pin	1	1	1	or 332-00021-0
2-8	350-00024-1	ﾋﾟｽﾄﾝﾋﾟﾝｸﾘｯﾌﾟ Piton Pin Clip	2	2	2	
2-9	3AB-00040-0	ｺﾝﾛｯﾄﾞｱｯｼ Connecting Rod Ass'y	1	1	1	
2-9-1	3AB-00059-0	ｺﾝﾛｯﾄﾞﾎﾞﾙﾄ ＊ Connecting Rod Bolt	2	2	2	
2-10	3AB-00121-0	ｵｲﾙｼｰﾙ、20-35-7 Oil Seal, 20-35-7	1	1	1	
2-11	309-00131-0	ﾏｸﾞﾈﾄｷｰ Magneto Key	1	1	1	

キャブレタ
Fig. 3 CARBURETOR

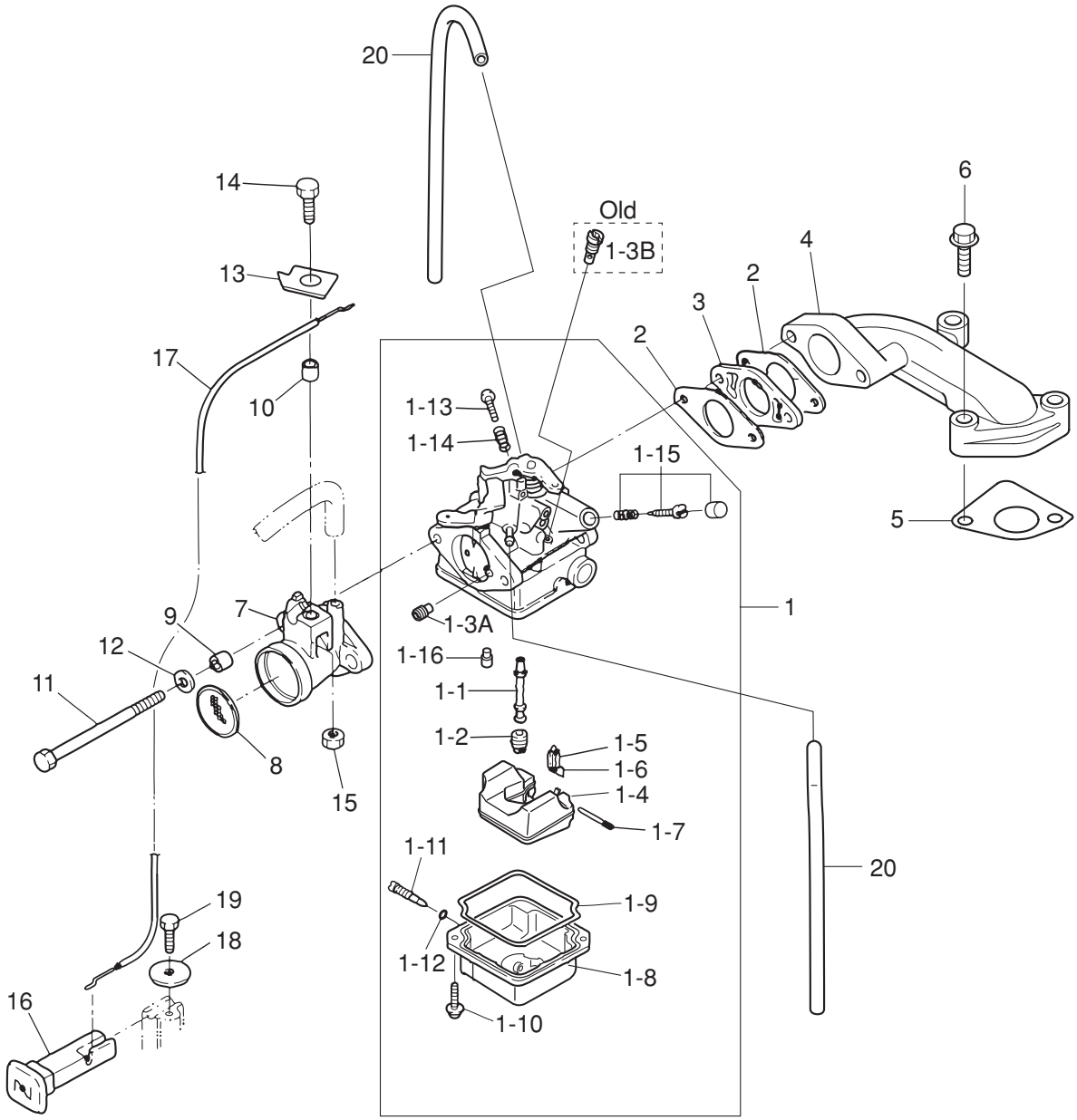

見出番号 Ref. No.	部品番号 Part No.	部　品　名 Description	個数 Q'ty F 3.5 B	F 2.5 B	F 2 B	備　考 Remarks
3-1	3GV-03200-0	ｷｬﾌﾞﾚﾀｱｯｼ Carburetor Ass'y	1	-	-	3.5B～ Mark: 3GVA
	3GU-03200-0	ｷｬﾌﾞﾚﾀｱｯｼ Carburetor Ass'y	-	1	-	2.5B～ Mark: 3GUA
	3GT-03200-0	ｷｬﾌﾞﾚﾀｱｯｼ Carburetor Ass'y	-	-	1	2B～ Mark: 3GTA
(3-1)	3BR-03200-1	ｷｬﾌﾞﾚﾀｱｯｼ (旧) Carburetor Ass'y (Old)	(1)	-	-	3.5A Mark: 3BRB
	3AB-03200-1	ｷｬﾌﾞﾚﾀｱｯｼ (旧) Carburetor Ass'y (Old)	-	(1)	-	2.5A Mark: 3ABB
	3BV-03200-1	ｷｬﾌﾞﾚﾀｱｯｼ (旧) Carburetor Ass'y (Old)	-	-	(1)	【2A～#016969XG(Do.Only)】 2A(EX) Mark: 3BVB
	3BV-03200-2	ｷｬﾌﾞﾚﾀｱｯｼ (旧) Carburetor Ass'y (Old)	-	-	(1)	【2A #022154XG～(Do. Only)】 Mark: 3BVC
3-1-1	3R4-03252-0	ﾒｲﾝﾉｽﾞﾙ * Main Nozzle	1	-	-	3.5B～
	3GU-03252-0	ﾒｲﾝﾉｽﾞﾙ * Main Nozzle	-	1	-	2.5B～
	3GT-03252-0	ﾒｲﾝﾉｽﾞﾙ * Main Nozzle	-	-	1	2B～
(3-1-1)	3BR-03252-0	ﾒｲﾝﾉｽﾞﾙ (旧) * Main Nozzle (Old)	(1)	-	-	3.5A
	3AB-03252-0	ﾒｲﾝﾉｽﾞﾙ (旧) * Main Nozzle (Old)	-	(1)	-	2.5A
	3BV-03252-0	ﾒｲﾝﾉｽﾞﾙ (旧) * Main Nozzle (Old)	-	-	(1)	2A
3-1-2	3AU-04468-0	ﾒｲﾝｼﾞｪｯﾄ # 68 * Main Jet # 68	1	-	-	3.5B～
	3R1-03251-0	ﾒｲﾝｼﾞｪｯﾄ # 65 * Main Jet # 65	-	1	-	2.5B～
	3DJ-04458-0	ﾒｲﾝｼﾞｪｯﾄ # 58 * Main Jet # 58	-	-	1	2B～
(3-1-2)	3AU-04468-0	ﾒｲﾝｼﾞｪｯﾄ # 68 (旧) * Main Jet # 68 (Old)	(1)	-	-	3.5A
	3AB-04462-0	ﾒｲﾝｼﾞｪｯﾄ # 62 (旧) * Main Jet # 62 (Old)	-	(1)	-	2.5A
	3DJ-04458-0	ﾒｲﾝｼﾞｪｯﾄ # 58 (旧) * Main Jet # 58 (Old)	-	-	(1)	2A
3-1-3A	3GT-04915-0	ｽﾛｰｴｱｰｼﾞｪｯﾄ # 115 * Slow Air Jet # 115	1	-	1	3.5B/2B～
	3GT-04925-0	ｽﾛｰｴｱｰｼﾞｪｯﾄ # 125 * Slow Air Jet # 125	-	1	-	2.5B～
(3-1-3B)	3R1-03254-0	ｽﾛｰｼﾞｪｯﾄ # 38 (旧) * Slow Jet # 38 (Old)	(1)	(1)	(1)	3.5A/2.5A/2A
3-1-4	3GT-03231-0	ﾌﾛｰﾄ * Float	1	1	1	3.5B/2.5B/2B～
	3AB-03231-0	ﾌﾛｰﾄ (旧) * Float (Old)	(1)	(1)	(1)	3.5A/2.5A/2A
3-1-5	3H6-03240-0	ﾌﾛｰﾄﾊﾞﾙﾌﾞ * Float Valve	1	1	1	
3-1-6	3H6-03244-0	ｸﾘｯﾌﾟ * Clip	1	1	1	
3-1-7	3H6-03232-0	ﾌﾛｰﾄｱｰﾑﾋﾟﾝ * Float Arm Pin	1	1	1	
3-1-8	3GT-03221-0	ﾌﾛｰﾄﾁｬﾝﾊﾞ * Float Chamber	1	1	1	3.5B/2.5B/2B～
	3H6-03221-0	ﾌﾛｰﾄﾁｬﾝﾊﾞ (旧) * Float Chamber (Old)	(1)	(1)	(1)	3.5A/2.5A/2A
3-1-9	3H6-03222-0	ﾌﾛｰﾄﾁｬﾝﾊﾞ O ﾘﾝｸﾞ * Float Chamber O-Ring	1	1	1	

キャブレタ
Fig. 3 CARBURETOR

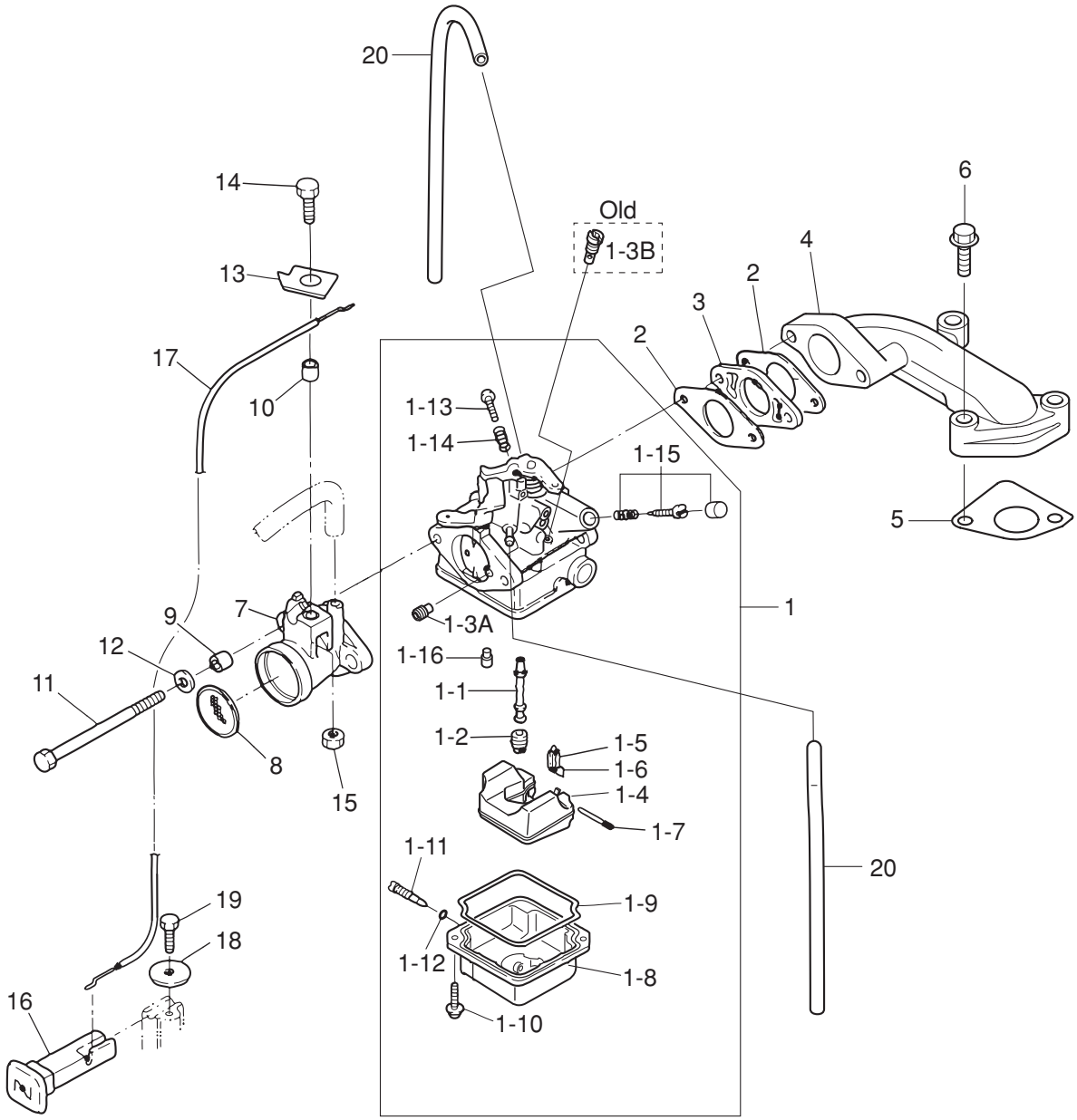

見出番号 Ref. No.	部品番号 Part No.	部　品　名 Description	個数 Q'ty F 3.5 B	F 2.5 B	F 2 B	備　考 Remarks
3-1-10	922503-6412	ｽｸﾘｭ ＊ Screw	2	2	2	
3-1-11	3H6-03292-0	ﾄﾞﾚﾝｽｸﾘｭ ＊ Drain Screw	1	1	1	
3-1-12	3H6-03293-0	ﾄﾞﾚﾝｽｸﾘｭ O ﾘﾝｸﾞ ＊ Drain Screw O-Ring	1	1	1	
3-1-13	3AB-03265-0	ｽﾄｯﾌﾟｽｸﾘｭ ＊ Stop Screw	1	1	1	
3-1-14	3H6-03267-0	ｽﾄｯﾌﾟｽｸﾘｭｽﾌﾟﾘﾝｸﾞ ＊ Stop Screw Spring	1	1	1	
3-1-15	3AB-03266-0	ﾊﾟｲﾛｯﾄｽｸﾘｭｾｯﾄ ＊ Pilot Screw Set	1	1	1	
(3-1-15)	3AS-03266-0	ﾊﾟｲﾛｯﾄｽｸﾘｭｾｯﾄ (旧) ＊ Pilot Screw Set (Old)	(1)	(1)	(1)	3.5A/2.5A/2A 【2A～#016969XG(Do.Only)】
	3AB-03266-0	ﾊﾟｲﾛｯﾄｽｸﾘｭｾｯﾄ (旧) ＊ Pilot Screw Set (Old)	-	-	(1)	for 3BV-03200-2 Carburetor 【2A #022154XG～(Do. Only)】
3-1-16	3GT-03256-0	ﾗﾊﾞｰｷｬｯﾌﾟ ＊ Rubber Cap	1	1	1	3.5B/2.5B/2B～
3-2	3H6-02011-0	ｷｬﾌﾞﾚﾀｶﾞｽｹｯﾄ Carburetor Gasket	2	2	2	
3-3	3H6-03952-1	ｲﾝｼｭﾚｰﾀ Insulator	1	1	1	
3-4	3BRB02091-0	ｲﾝﾃｰｸﾏﾆﾎｰﾙﾄﾞ Intake Manifold	1	1	1	
3-5	3AB-02104-0	ｲﾝﾃｰｸﾏﾆﾎｰﾙﾄﾞｶﾞｽｹｯﾄ Intake Manifold Gasket	1	1	1	
3-6	9101F4-5630	ﾎﾞﾙﾄ Bolt	2	2	2	or 910114-5630
3-7	3H6-02411-0	ｲﾝﾃｰｸｻｲﾚﾝｻ Intake Silencer	1	1	1	
3-8	3H6-02603-0	ﾌﾚｰﾑｱﾚｽﾀｰ Flame Arrester	1	1	1	
3-9	3A0-76079-0	ｶﾗｰ、6.2-9-7.5 Collar, 6.2-9-7.5	2	2	2	
3-10	3H6-76079-1	ｶﾗｰ、6.2-9-7 Collar, 6.2-9-7	1	1	1	
3-11	9161F1-0685	ﾎﾞﾙﾄ Bolt	2	2	2	or 916181-0685
3-12	940103-0600	ﾜｯｼｬ Washer	2	2	2	or 940113-0600
3-13	3H6-63505-0	ｹｰﾌﾞﾙﾎﾙﾀﾞ Cable Holder	1	1	1	
3-14	910103-0616	ﾎﾞﾙﾄ Bolt	1	1	1	
3-15	930103-0600	ﾅｯﾄ Nut	1	1	1	
3-16	3H6-67151-0	ﾁｮｰｸﾛｯﾄﾞ Choke Rod	1	1	1	
3-17	3AB-67197-0	ﾁｮｰｸﾘﾝｸﾜｲﾔ Choke Link Cable	1	1	1	
3-18	346-67115-0	ﾜｯｼｬ、6.5-21-1 Washer, 6.5-21-1	1	1	1	
3-19	910103-0612	ﾎﾞﾙﾄ Bolt	1	1	1	
3-20	98AB-3-0230	ｺﾞﾑﾎｰｽ Rubber Hose	2	2	2	

オイルパン
Fig. 4 OIL PAN

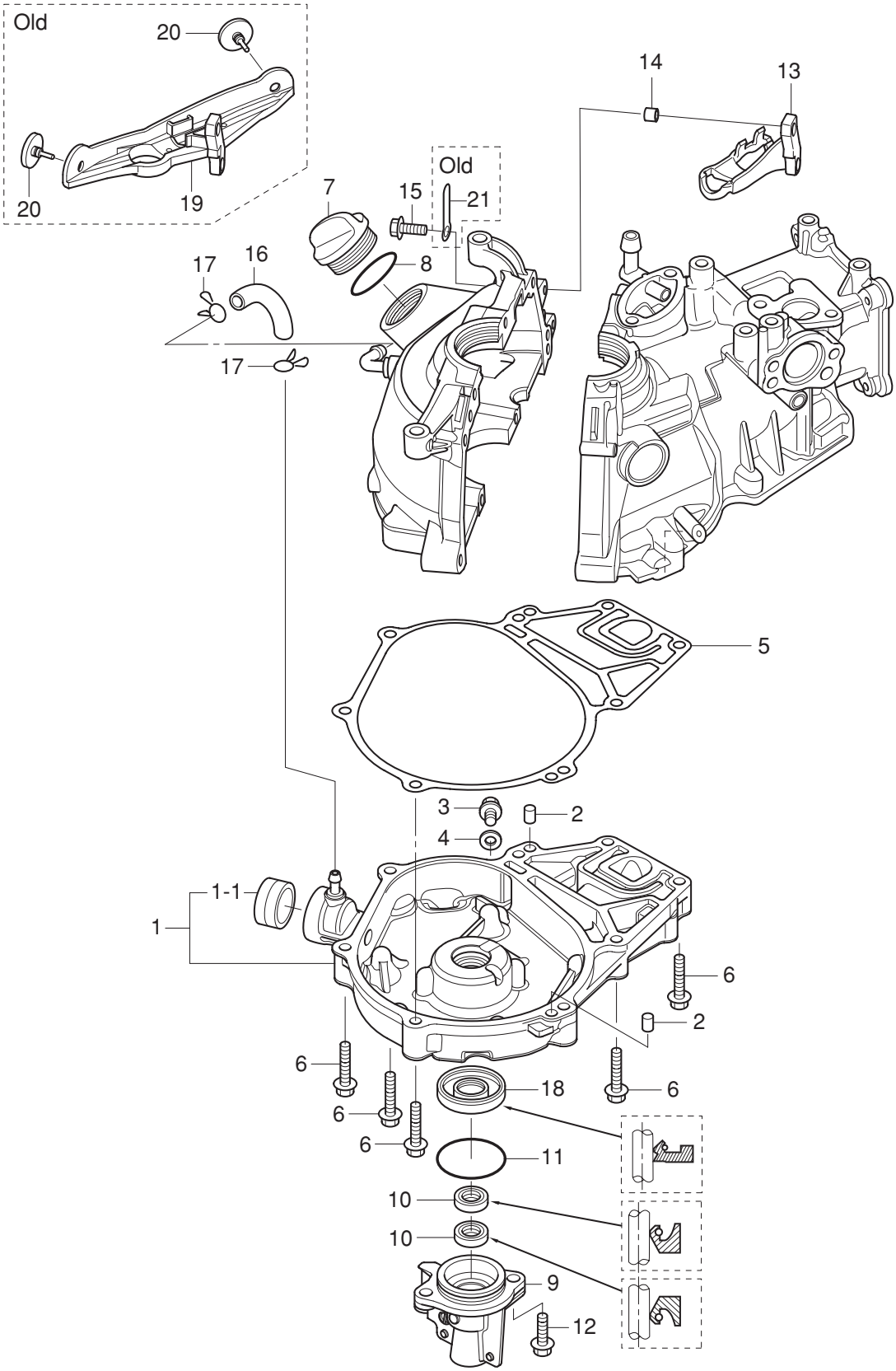

見出番号 Ref. No.	部品番号 Part No.	部　品　名 Description	個数 Q'ty F 3.5 B	F 2.5 B	F 2 B	備　考 Remarks
4-1	3ABB07400-0	ｵｲﾙﾊﾟﾝｱｯｼ Oil Pan Ass'y	1	1	1	
4-1-1	3AB-07421-0	＊ ｵｲﾙﾚﾍﾞﾙｹﾞｰｼﾞ Oil Level Gauge	1	1	1	
4-2	345-01111-0	ﾀﾞｳｴﾙﾋﾟﾝ、6-12 Dowel Pin, 6-12	2	2	2	
4-3	3H6-07705-1	ﾄﾞﾚﾝﾎﾞﾙﾄ Drain Bolt	1	1	1	(Old Part No 3H6-07405-0) # 022564XH～
4-4	3H6-07406-0	ﾜｯｼｬ、10.2-19-1 Washer, 10.2-19-1	1	1	1	
4-5	3AB-07402-0	ｵｲﾙﾊﾟﾝｶﾞｽｹｯﾄ Oil Pan Gasket	1	1	1	
4-6	9101F4-5635	ﾎﾞﾙﾄ Bolt	8	8	8	or 910114-5635
4-7	3R0-71015-0	ｴﾝｼﾞﾝｵｲﾙﾌｨﾗｰｷｬｯﾌﾟ Engine Oil Filler Cap	1	1	1	
4-8	3R0-07422-0	O ﾘﾝｸﾞ、3.1-24.4 O-Ring, 3.1-24.4	1	1	1	
4-9	3AB-01210-0	ｸﾗﾝｸｹｰｽﾍｯﾄﾞ Crank Case Head	1	1	1	
4-10	3AB-01215-0	ｵｲﾙｼｰﾙ、10.1-20-7 Oil Seal, 10.1-20-7	2	2	2	
4-11	3V1-02012-0	O ﾘﾝｸﾞ 2.4-35.2 O-Ring, 2.4-35.2	1	1	1	
4-12	9101E3-5620	ﾎﾞﾙﾄ Bolt	2	2	2	or 910113-5620
4-13	3GT-05101-0	ﾌﾞﾗｹｯﾄ Bracket	1	1	1	3.5B/2.5B/2B～
4-14	3A0-76079-0	ｶﾗｰ、6.2-9-7.4 Collar, 6.2-9-7.4	2	2	2	
4-15	9101E3-5620	ﾎﾞﾙﾄ Bolt	2	2	2	or 910113-5620
4-16	98AB-5-0080	ｺﾞﾑﾎｰｽ Rubber Hose	1	1	1	
4-17	338-02215-0	ｸﾘｯﾌﾟ、φ10 Clip, φ10	2	2	2	
4-18	3AB-00121-0	ｵｲﾙｼｰﾙ、20-35-7 Oil Seal, 20-35-7	1	1	1	
4-19	3AB-05101-0	ﾌﾞﾗｹｯﾄ Bracket	(1)	(1)	(1)	3.5A/2.5A/2A
4-20	1E0-09104-0	ﾗﾊﾞｰﾀﾞﾝﾊﾟ Rubber Damper	(2)	(2)	(2)	3.5A/2.5A/2A
4-21	398-06972-0	ｸﾗﾝﾌﾟ、6.5-67P Clamp, 6.5-67P	(1)	(1)	(1)	# 01654XG～ 3.5A/2.5A/2A

カムシャフト & バルブ
Fig. 5 CAMSHAFT & VALVE

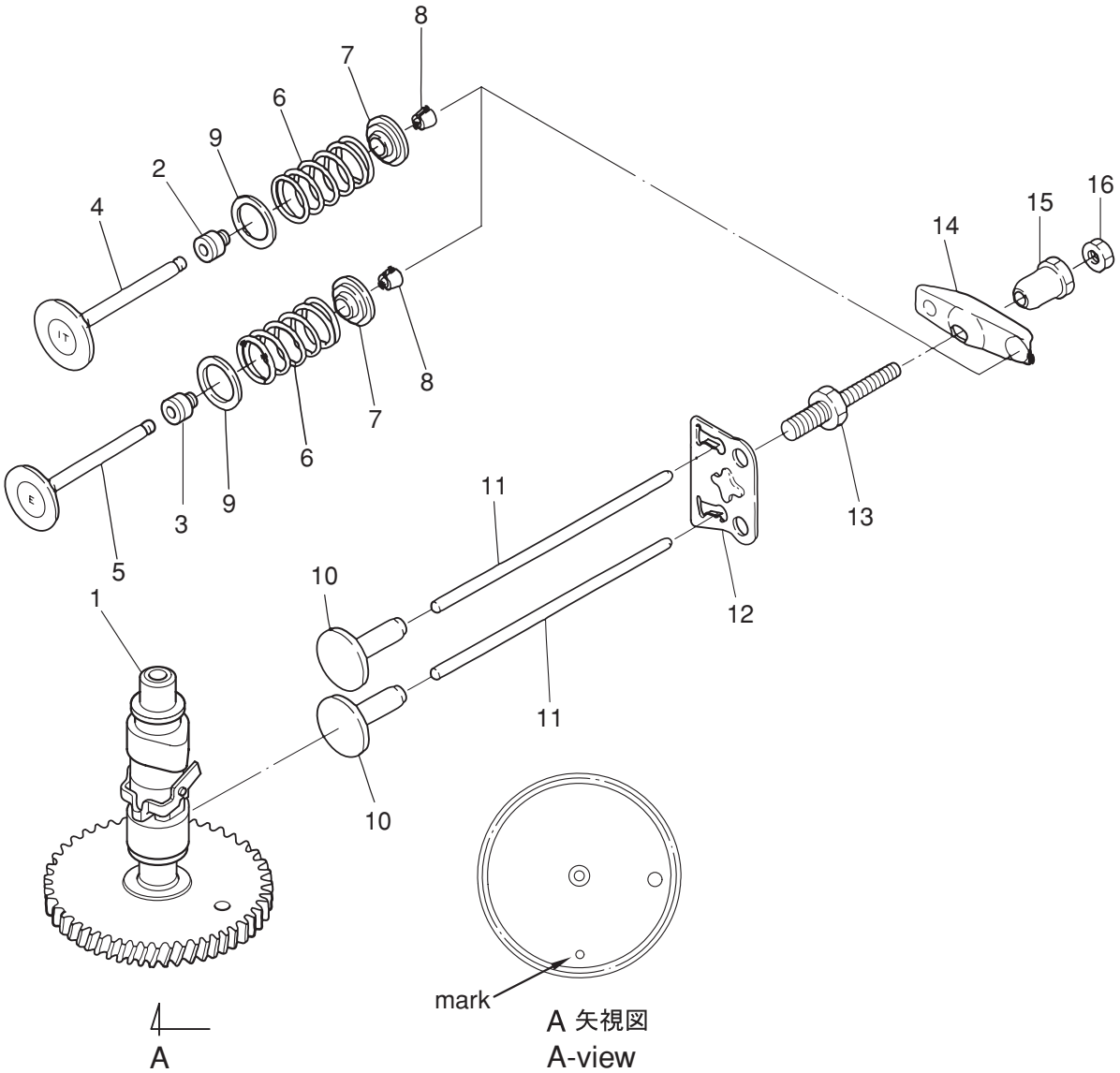

見出番号 Ref. No.	部品番号 Part No.	部　品　名 Description	個数 Q'ty F 3.5 B	F 2.5 B	F 2 B	備　考 Remarks
5-1	3GT-07810-0	ｶﾑｼｬﾌﾄｱｯｼ Camshaft Ass'y	1	1	1	3.5B/2.5B/2B～
	3BM-07010-1	ｶﾑｼｬﾌﾄｱｯｼ (旧) Camshaft Ass'y (Old)	(1)	(1)	(1)	3.5A/2.5A/2A
5-2	3R3-07204-0	ｲﾝﾃｰｸﾊﾞﾙﾌﾞｽﾃﾑｼｰﾙ Intake Valve Stem Seal	1	1	1	Black
5-3	3R3-07206-0	ｴｷｿﾞｰｽﾄﾊﾞﾙﾌﾞｽﾃﾑｼｰﾙ Exhaust Valve Stem Seal	1	1	1	Green
5-4	3AB-07201-0	ｲﾝﾃｰｸﾊﾞﾙﾌﾞ Intake Valve	1	1	1	
5-5	3V1-07202-0	ｴｷｿﾞｰｽﾄﾊﾞﾙﾌﾞ Exhaust Valve	1	1	1	
5-6	3AE-07203-0	ﾊﾞﾙﾌﾞｽﾌﾟﾘﾝｸﾞ Valve Spring	2	2	2	L=35 or 3H6-07203-1
5-7	3V1-07221-0	ﾘﾃｰﾅ Retainer	2	2	2	
5-8	3H6-07223-0	ｺｯﾀｰ Cotter	4	4	4	
5-9	3H6-07205-0	ﾊﾞﾙﾌﾞｽﾌﾟﾘﾝｸﾞｼｰﾄ Valve Spring Seat	2	2	2	
5-10	3AB-07231-0	ﾘﾌﾀ Lifter	2	2	2	
5-11	3H6-07232-0	ﾌﾟｯｼｭﾛｯﾄﾞ Push Rod	2	2	2	
5-12	3AB-07233-0	ﾌﾟｯｼｭﾛｯﾄﾞﾌﾟﾚｰﾄ Push Rod Plate	1	1	1	
5-13	3H6-07234-0	ﾋﾟﾎﾞｯﾄﾎﾞﾙﾄ Pivot Bolt	2	2	2	
5-14	3AB-07235-0	ﾛｯｶｰｱｰﾑ Rocker Arm	2	2	2	
5-15	3H6-07236-0	ﾛｯｶｰｱｰﾑﾋﾟﾎﾞｯﾄ Rocker Arm Pivot	2	2	2	
5-16	3H6-07937-0	ｱｼﾞｬｽﾄﾅｯﾄ (t=4.0) Adjusting Nut (t=4.0)	2	2	2	New # 042923XH～
	3H6-07237-0	ｱｼﾞｬｽﾄﾅｯﾄ (t=3.2) Adjusting Nut (t=3.2)	(2)	(2)	(2)	Old ～# 036157XH

マグネト
Fig. 6 MAGNETO

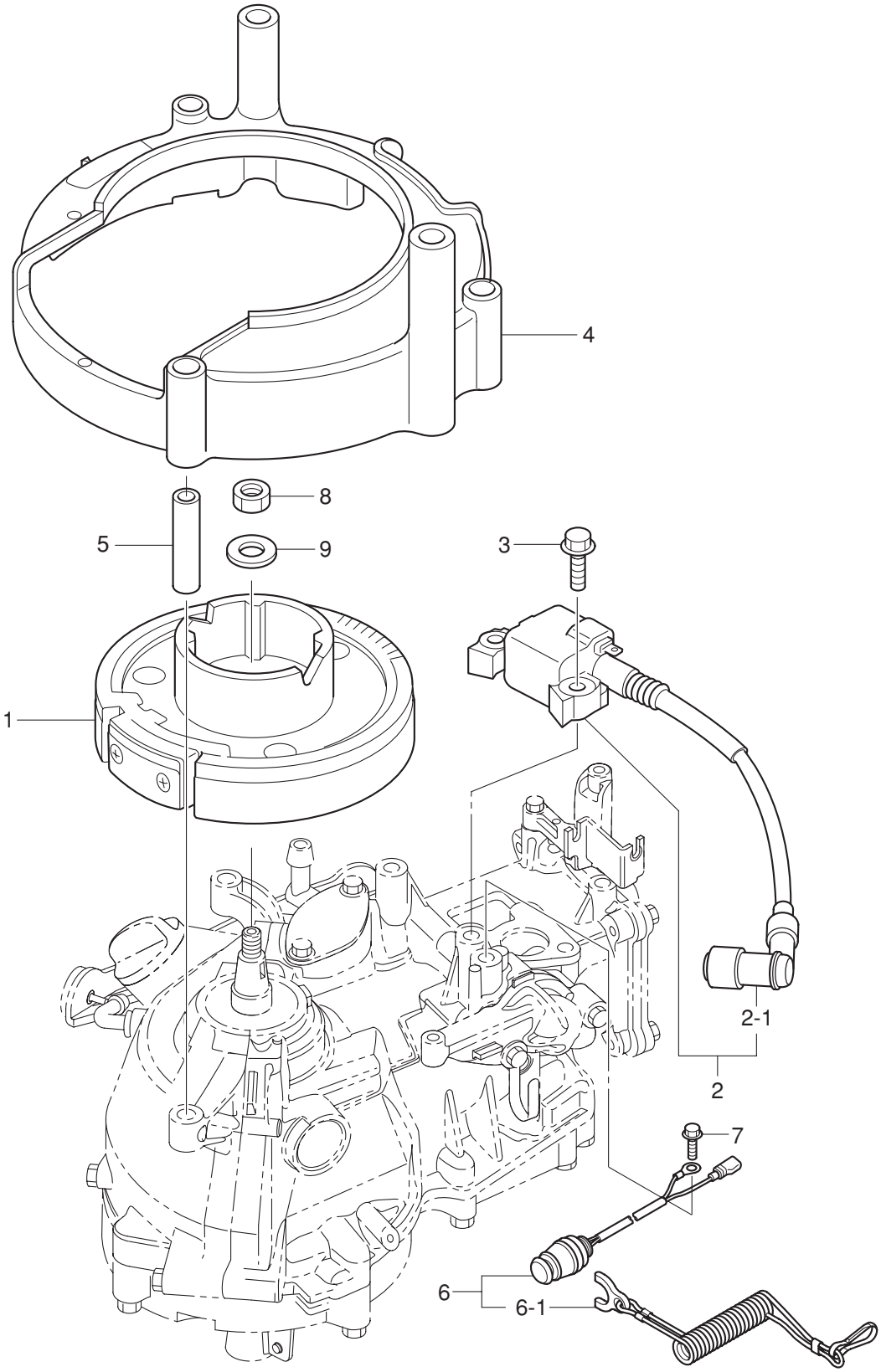

見出番号 Ref. No.	部品番号 Part No.	部　品　名 Description	個数 Q'ty F 3.5 B	F 2.5 B	F 2 B	備　考 Remarks
6-1	3GT-06001-0	ﾌﾗｲﾎｲﾙｶｯﾌﾟ Flywheel Cup	1	1	1	3.5B/2.5B/2B～ Mark: MF5494
	3AB-06001-0	ﾌﾗｲﾎｲﾙｶｯﾌﾟ (旧) Flywheel Cup (Old)	(1)	(1)	(1)	3.5A/2.5A/2A
6-2	3GT-06041-0	ｲｸﾞﾅｲﾀ Igniter	1	1	1	3.5B/2.5B/2B～ Mark: IU3123
	3AB-06041-0	ｲｸﾞﾅｲﾀ (MAU-6A) (旧) Igniter (MAU-6A) (Old)	(1)	(1)	(1)	3.5A/2.5A/2A 【2A ～#016969XG (Do, Only)】
	3AB-06041-1	ｲｸﾞﾅｲﾀ (MAU-11) (旧) Igniter (MAU-11) (Old)	-	-	(1)	【2A #022154XG～ (Do, Only)】
6-2-1	3H6-06999-0	ﾌﾟﾗｸﾞｷｬｯﾌﾟ (ﾚｼﾞｽﾀﾝｽ) ＊ Plug Cap (with Resistance)	1	1	1	
6-3	910103-5625	ﾎﾞﾙﾄ Bolt	2	2	2	3.5B/2.5B/2B～
	910103-5620	ﾎﾞﾙﾄ (旧) Bolt (Old)	(2)	(2)	(2)	3.5A/2.5A/2A
6-4	3AB-06300-1	ﾌﾗｲﾎｲﾙｶﾊﾞｰ Flywheel Cover	1	1	1	
6-5	3AB-06303-1	ｶﾗｰ、6.2-9-35 Collar, 6.2-9-35	3	3	3	
6-6	3AS-06870-0	ｽﾄｯﾌﾟｽｲｯﾁｱｯｼ Stop Switch Ass'y	1	1	1	3.5B/2.5B/2B～
	3D5-06870-0	ｽﾄｯﾌﾟｽｲｯﾁｱｯｼ (旧) Stop Switch Ass'y (Old)	(1)	(1)	(1)	3.5A/2.5A/2A
6-6-1	353-06821-0	ｽﾄｯﾌﾟｽｲｯﾁﾛｯｸ (ﾛｰﾌﾟ付) ＊ Stop Switch Lanyard	1	1	1	
6-7	910103-5612	ﾎﾞﾙﾄ Bolt	1	1	1	
6-8	309-00132-0	ﾏｸﾞﾈﾄﾅｯﾄ (10P-1.25) Magneto Nut (10P-1.25)	1	1	1	
6-9	940121-1000	ﾜｯｼｬ Washer	1	1	1	

ティラハンドル & スロットル
Fig. 7 TILLER HANDLE & THROTTLE

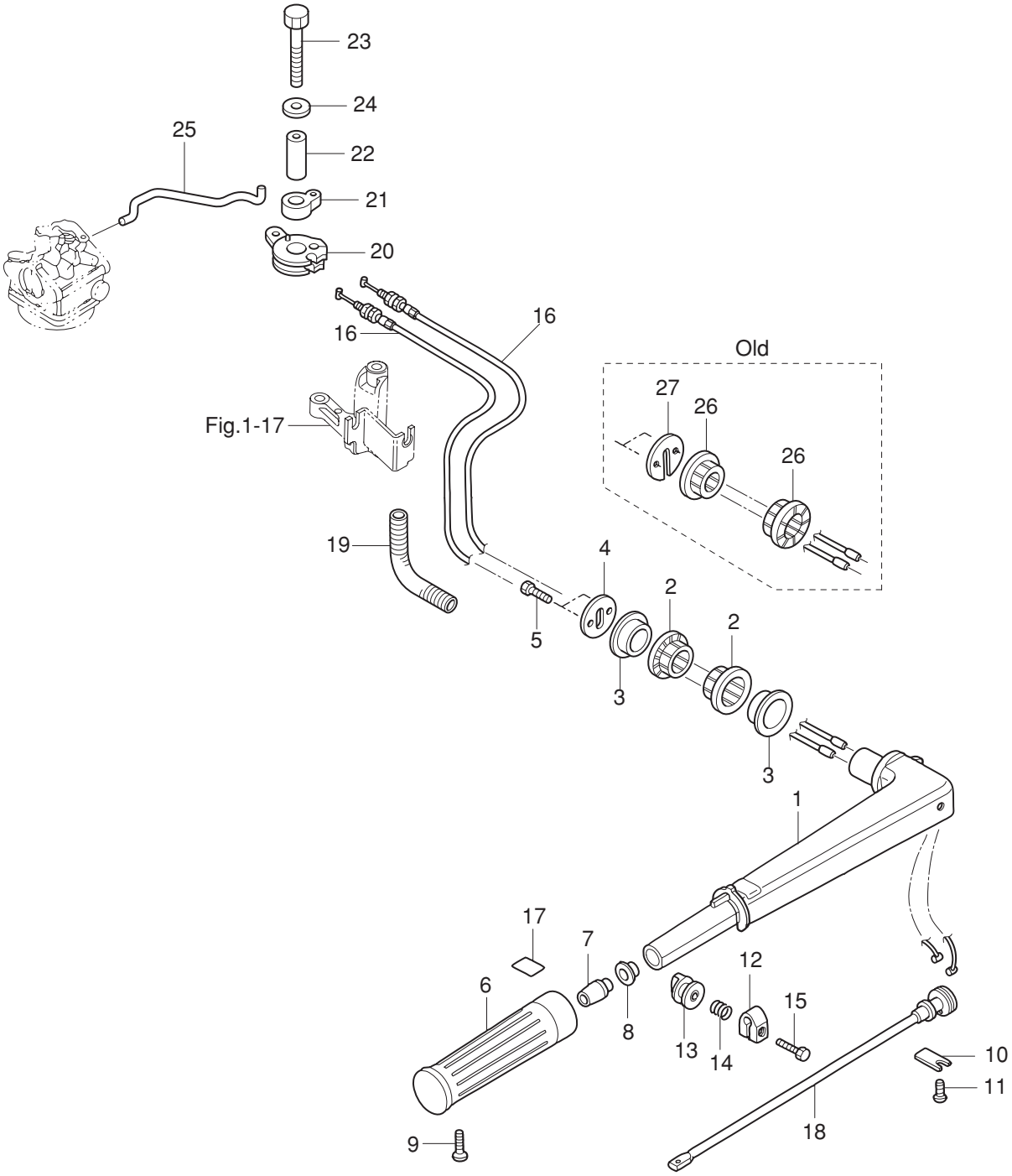

見出番号 Ref. No.	部品番号 Part No.	部　品　名 Description	個数 Q'ty F 3.5 B	F 2.5 B	F 2 B	備　考 Remarks
7-1	3V1Q63011-2	ﾃｨﾗﾊﾝﾄﾞﾙ Tiller Handle	1	1	1	or 3V1Q63011-1
7-2	3AB-63102-0	ﾃｨﾗﾊﾝﾄﾞﾙﾌﾞｯｼﾝｸﾞ Tiller Handle Bushing	2	2	2	New # 022154XG～
7-3	3BR-63102-1	ﾊﾝﾄﾞﾙﾌﾞｯｼﾝｸﾞ（ﾌﾟﾗｽﾁｯｸ） Handle Bushing (Plastic)	2	2	2	New # 022154XG～
7-4	3AB-63107-0	ｶﾊﾞｰ Cover	1	1	1	New # 022154XG～
7-5	9101E3-0616	ﾎﾞﾙﾄ Bolt	2	2	2	or 910113-0616
7-6	3R3-63012-0	ｸﾞﾘｯﾌﾟ Grip	1	1	1	
7-7	3H6-63048-0	ｽﾛｯﾄﾙｼｬﾌﾄﾀﾞﾝﾊﾟ Throttle Shaft Damper	1	1	1	
7-8	3H6-63510-0	ﾌﾞｯｼﾝｸﾞ、14-15.8-7 Bushing, 14-15.8-7	1	1	1	
7-9	9208E3-0518	ｽｸﾘｭ Screw	1	1	1	or 920813-0518
7-10	3B2-63063-0	ｽﾛｯﾄﾙｼｬﾌﾄｻﾎﾟｰﾀ Throttle Shaft Supporter	1	1	1	
7-11	921503-0612	ｽｸﾘｭ Screw	1	1	1	or 921513-0612
7-12	3V1-63035-1	ﾌﾘｸｼｮﾝﾋﾟｰｽ Friction Piece	1	1	1	
7-13	3V1-63077-0	ｱｼﾞｬｽﾄﾅｯﾄ Adjusting Nut	1	1	1	
7-14	3V1-63036-0	ｽﾌﾟﾘﾝｸﾞ Spring	1	1	1	
7-15	910103-0625	ﾎﾞﾙﾄ Bolt	1	1	1	or 910113-0625
7-16	3V1-63600-0	ｽﾛｯﾄﾙﾜｲﾔ Throttle Cable	2	2	2	
7-17	3V9-72019-0	ｽﾛｯﾄﾙﾃﾞｶﾙ Throttle Decal	1	1	1	
7-18	3V1-63041-0	ｽﾛｯﾄﾙｼｬﾌﾄ Throttle Shaft	1	1	1	
7-19	3H9-70313-0	ｽﾛｯﾄﾙﾜｲﾔﾌﾟﾛﾃｸﾀ Throttle Cable Protector	1	1	1	
7-20	3H6-63611-0	ｽﾛｯﾄﾙﾄﾞﾗﾑ Throttle Drum	1	1	1	
7-21	3H6-63612-0	ｽﾛｯﾄﾙｵｰﾌﾟﾅ Throttle Opener	1	1	1	
7-22	3H6-63618-0	ｶﾗｰ、6.5-10.5-22.6 Collar, 6.5-10.5-22.6	1	1	1	or 3R3-66124-0
7-23	9161E3-0635	ﾎﾞﾙﾄ Bolt	1	1	1	or 916113-0635
7-24	3C8-66308-0	ﾜｯｼｬ、6-16-1.5 Washer, 6-16-1.5	1	1	1	
7-25	3AB-63617-0	ｽﾛｯﾄﾙﾛｯﾄﾞ Throttle Rod	1	1	1	
7-26	369-63102-0	ﾃｨﾗﾊﾝﾄﾞﾙﾌﾞｯｼﾝｸﾞ Tiller Handle Bushing	(2)	(2)	(2)	Old ～# 016969XG
7-27	3V1-63107-0	ｶﾊﾞｰ Cover	(1)	(1)	(1)	Old ～# 016969XG

リコイルスタータ
Fig. 8 RECOIL STARTER

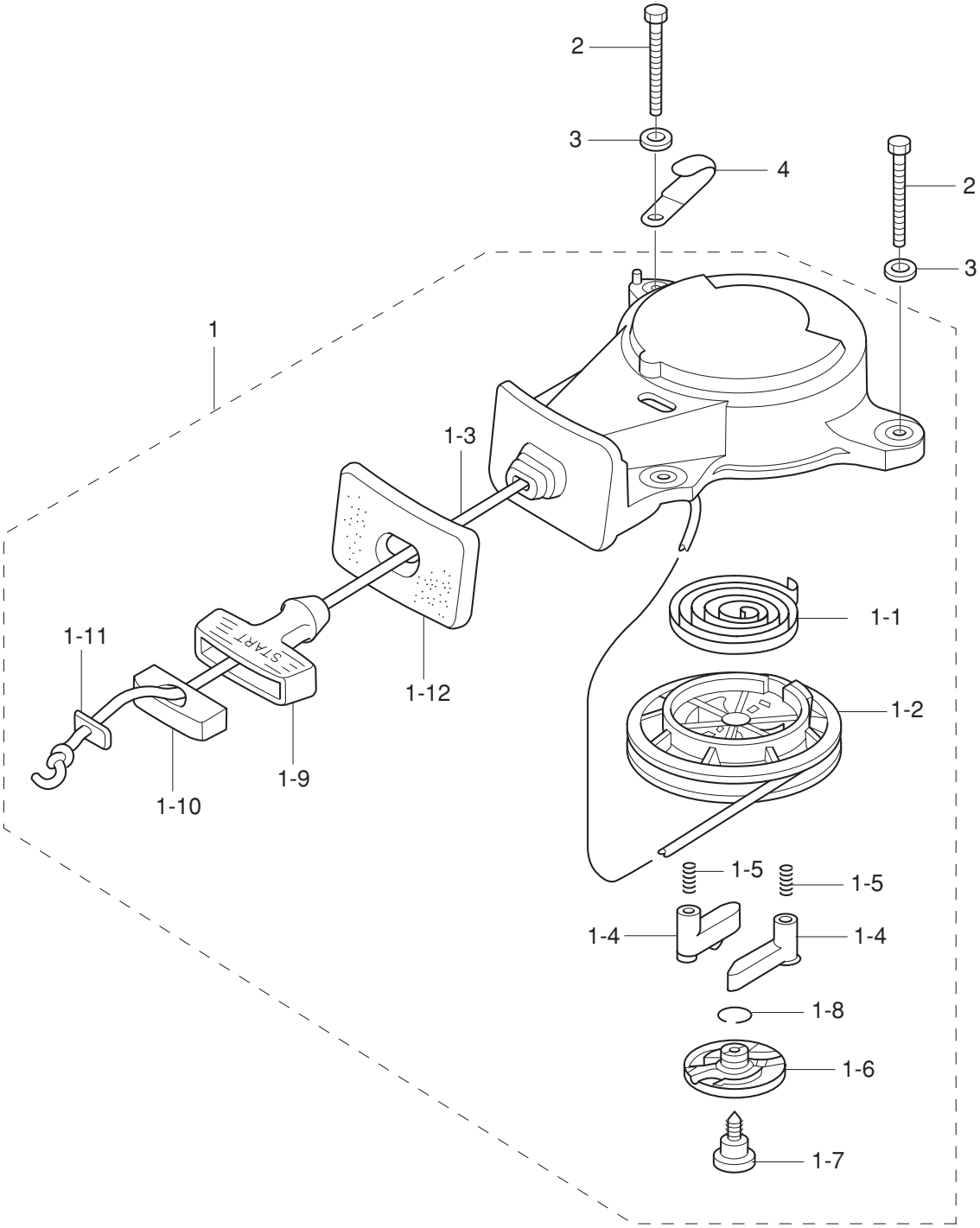

見出番号 Ref. No.	部品番号 Part No.	部　品　名 Description	個数 Q'ty F 3.5 B	F 2.5 B	F 2 B	備　考 Remarks
8-1	3AB-05090-0	ﾘｺｲﾙｽﾀｰﾀ Recoil Starter	1	1	1	
8-1-1	3AB-05004-0	ﾊﾟﾀｰﾀｽﾌﾟﾘﾝｸﾞ ＊ Starter Spring	1	1	1	
8-1-2	3AB-05104-0	ﾘｰﾙ ＊ Reel	1	1	1	
8-1-3	3AB-05013-0	ｽﾀｰﾀﾛｰﾌﾟ ＊ Starter Rope	1	1	1	φ3.5-1200
8-1-4	3AB-05003-0	ﾗﾁｪｯﾄ ＊ Ratchet	2	2	2	
8-1-5	3AB-05012-0	ﾘﾀｰﾝｽﾌﾟﾘﾝｸﾞ ＊ Return Spring	2	2	2	
8-1-6	3AB-05006-0	ﾌﾘｸｼｮﾝﾌﾟﾚｰﾄ ＊ Friction Plate	1	1	1	
8-1-7	3AB-05138-0	ｽﾀｰﾀｼｬﾌﾄｽｸﾘｭ ＊ Starter Shaft Screw	1	1	1	
8-1-8	3AB-05007-0	ﾌﾘｸｼｮﾝｽﾌﾟﾘﾝｸﾞ ＊ Friction Spring	1	1	1	
8-1-9	3AB-05019-0	ｽﾀｰﾀﾊﾝﾄﾞﾙ ＊ Starter Handle	1	1	1	
8-1-10	3AB-05131-0	ﾛｰﾌﾟｱﾝｶ ＊ Rope Anchor	1	1	1	
8-1-11	3AB-05134-0	ﾛｰﾌﾟｱﾝｶﾌﾟﾚｰﾄ ＊ Rope Anchor Plate	1	1	1	
8-1-12	3AA-67503-0	ｽﾀｰﾀｼｰﾙ ＊ Starter Seal	1	1	1	
8-2	910103-0660	ﾎﾞﾙﾄ Bolt	3	3	3	
8-3	3C8-66308-0	ﾜｯｼｬ、6-16-1.5 Washer, 6-16-1.5	3	3	3	
8-4	398-06972-0	ｸﾗﾝﾌﾟ、6.5-67P Clamp, 6.5-67P	1	1	1	

ドライブシャフトハウジング & ギヤケース

Fig. 9 DRIVE SHAFT HOUSING & GEAR CASE

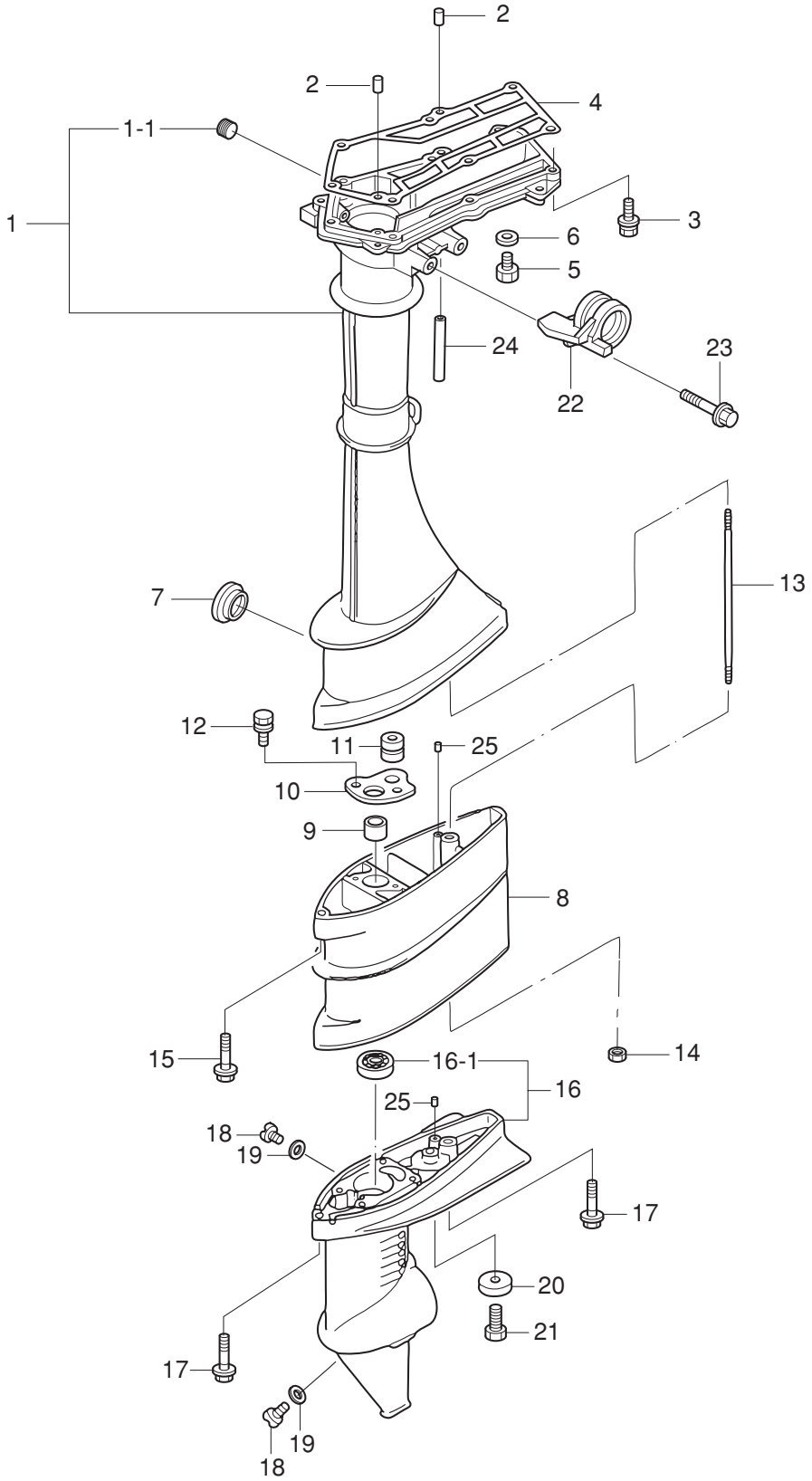

見出番号 Ref. No.	部品番号 Part No.	部　品　名 Description	個数 Q'ty F 3.5 B	F 2.5 B	F 2 B	備　考 Remarks
9-1	3ABQ61020-1	ﾄﾞﾗｲﾌﾞｼｬﾌﾄﾊｳｼﾞﾝｸﾞ S Drive Shaft Housing "S"	1	1	1	
9-1-1	3H6-07257-0	ｴｷｿﾞｰｽﾄﾌﾟﾗｸﾞ ＊ Exhaust Plug	1	1	1	
9-2	345-01111-0	ﾀﾞｳｴﾙﾋﾟﾝ、6-12 Dowel Pin, 6-12	2	2	2	
9-3	9101E3-5630	ﾎﾞﾙﾄ Bolt	7	7	7	or 910113-5630
9-4	3AB-61012-0	ﾄﾞﾗｲﾌﾞｼｬﾌﾄﾊｳｼﾞﾝｸﾞｶﾞｽｹｯﾄ Drive Shaft Housing Gasket	1	1	1	
9-5	9106E3-0808	ｳｫｰﾀﾌﾟﾗｸﾞ Water Plug	1	1	1	or 910613-0808
9-6	332-60006-0	ｶﾞｽｹｯﾄ、8.1-15-1 Gasket, 8.1-15-1	1	1	1	
9-7	369-61016-0	ｸﾞﾛﾒｯﾄ、29-3 Grommet, 29-3	1	1	1	
9-8	3ABQ61100-0	ｴｸｽﾃﾝｼｮﾝﾊｳｼﾞﾝｸﾞ L Extension Housing " L"	1	1	1	
9-9	3AB-60003-0	ﾄﾞﾗｲﾌﾞｼｬﾌﾄﾌﾞｯｼﾝｸﾞ Drive Shaft Bushing	1	1	1	
9-10	3AB-64332-0	ﾄﾞﾗｲﾌﾞｼｬﾌﾄﾌﾞｯｼﾝｸﾞｽﾄｯﾊﾟ Drive Shaft Bushing Stopper	1	1	1	
9-11	172-36008-0	ｸﾞﾛﾒｯﾄ、13-2 Grommet, 13-2	1	1	1	for Transom "L"
9-12	9101E3-5612	ﾎﾞﾙﾄ Bolt	2	2	2	(or 910113-5612)
9-13	3F0-61101-1	ｽﾀｯﾄﾞﾎﾞﾙﾄ、6-171 Stud Bolt, 6-171	1	1	1	
9-14	9301E3-0600	ﾅｯﾄ Nut	1	1	1	(or 930113-0600)
9-15	3AB-60001-1	ﾎﾞﾙﾄ、6-30 ﾌﾟﾚｺｰﾄ Bolt, 6-30 Pre-coated	1	1	1	
9-16	3BMQ60000-1	ｷﾞﾔｹｰｽ Gear Case	1	1	1	or 3BMQ60000-0
9-16-1	3AB-60213-0	ﾎﾞｰﾙﾍﾞｱﾘﾝｸﾞ、6000 ＊ Ball Bearing, 6000	1	1	1	
9-17	3AB-60001-1	ﾎﾞﾙﾄ、6-30 ﾌﾟﾚｺｰﾄ Bolt, 6-30 Pre-coated	2	2	2	# 061547XH～
9-18	332-60005-2	ｵｲﾙﾌﾟﾗｸﾞ Oil Plug	2	2	2	
9-19	332-60006-0	ｶﾞｽｹｯﾄ、8.1-15-1 Gasket, 8.1-15-1	2	2	2	
9-20	338-60218-2	ｱﾉｰﾄﾞ Anode	1	1	1	
9-21	910103-0616	ﾎﾞﾙﾄ Bolt	1	1	1	
9-22	3ABQ62001-1	ｽﾃｱﾘﾝｸﾞﾌﾞﾗｹｯﾄ Steering Bracket	1	1	1	# 030015XH～
9-23	9101E3-5835	ﾎﾞﾙﾄ Bolt	2	2	2	or 910113-5835
9-24	98AB-3-0050	ｺﾞﾑﾎｰｽ Rubber Hose	1	1	1	
9-25	3AB-01111-0	ﾀﾞｳｴﾙﾋﾟﾝ、6-12 Dowel Pin, 6-12	2	2	2	

ギヤケース（ドライブシャフト）
Fig. 10 GEAR CASE (DRIVE SHAFT)

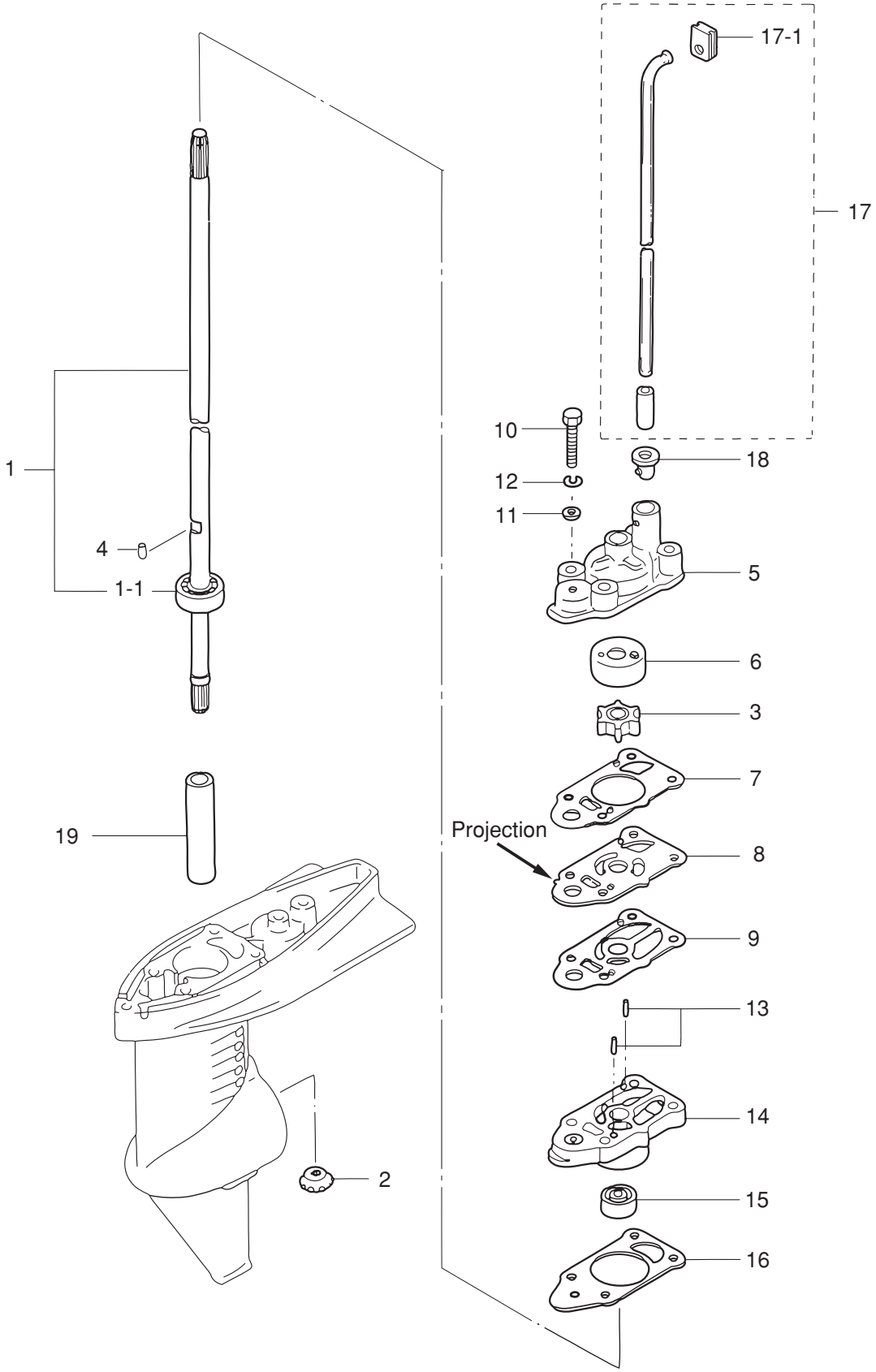

見出番号 Ref. No.	部品番号 Part No.	部　品　名 Description	個数 Q'ty F 3.5 B	F 2.5 B	F 2 B	備　考 Remarks
10-1	3AB-64306-0	ﾄﾞﾗｲﾌﾞｼｬﾌﾄ S Drive Shaft "S"	1	1	1	for Transom "S"
	3AB-64307-0	ﾄﾞﾗｲﾌﾞｼｬﾌﾄ L Drive Shaft "L"	1	1	1	for Transom "L"
10-1-1	3AB-60213-0	ﾎﾞｰﾙﾍﾞｱﾘﾝｸﾞ、6000 * Ball Bearing, 6000	1	1	1	
10-2	369-64020-2	ﾍﾞﾍﾞﾙｷﾞﾔ B Bevel Gear "B"	1	1	1	
10-3	369-65021-1	ｳｫｰﾀﾎﾟﾝﾌﾟｲﾝﾍﾟﾗ Water Pump Impeller	1	1	1	
10-4	369-65022-0	ｳｫｰﾀﾎﾟﾝﾌﾟｲﾝﾍﾟﾗｷｰ Water Pump Impeller Key	1	1	1	
10-5	3F0-65016-0	ﾎﾟﾝﾌﾟｹｰｽ (ｱｯﾊﾟ) Pump Case (Upper)	1	1	1	
10-6	3F0-65011-0	ﾎﾟﾝﾌﾟｹｰｽﾗｲﾅ Pump Case Liner	1	1	1	
10-7	3F0-65018-0	ﾎﾟﾝﾌﾟｹｰｽｶﾞｽｹｯﾄ (ｱｯﾊﾟ) Pump Case Gasket (Upper)	1	1	1	
10-8	3AB-65025-0	ｳｫｰﾀﾎﾟﾝﾌﾟｶﾞｲﾄﾞﾌﾟﾚｰﾄ Water Pump Guide Plate	1	1	1	
10-9	3F0-65029-0	ﾎﾟﾝﾌﾟｶﾞｲﾄﾞﾌﾟﾚｰﾄｶﾞｽｹｯﾄ Pump Guide Plate Gasket	1	1	1	
10-10	9161E3-0645	ﾎﾞﾙﾄ Bolt	4	4	4	or 916113-0645
10-11	940103-0600	ﾜｯｼｬ Washer	4	4	4	
10-12	941303-0600	ｽﾌﾟﾘﾝｸﾞﾜｯｼｬ Spring Washer	4	4	4	
10-13	3B2-65022-0	ﾀﾞｳｴﾙﾋﾟﾝ、2-11 Dowel Pin, 2-11	2	2	2	
10-14	3AB-65007-0	ﾎﾟﾝﾌﾟｹｰｽ (ﾛﾜ) Pump Case (Lower)	1	1	1	with Bushing & O-Ring Old Part No. 3F0-65040-1
10-15	3F0-60223-0	ｵｲﾙｼｰﾙ、10-22-8 Oil Seal, 10-22-8	1	1	1	
10-16	3F0-65020-0	ﾎﾟﾝﾌﾟｹｰｽｶﾞｽｹｯﾄ (ﾛﾜ) Pump Case Gasket (Lower)	1	1	1	
10-17	3AB-65191-0	ｳｫｰﾀﾊﾟｲﾌﾟ　S Water Pipe "S"	1	1	1	for Transom "S"
	3AB-65192-0	ｳｫｰﾀﾊﾟｲﾌﾟ　L Water Pipe "L"	1	1	1	for Transom "L"
10-17-1	3AB-65031-0	ｳｫｰﾀﾊﾟｲﾌﾟｸﾞﾛﾒｯﾄ (ｱｯﾊﾟ) * Water Pipe Grommet (Upper)	1	1	1	
10-18	3F0-65032-0	ｳｫｰﾀﾊﾟｲﾌﾟｸﾞﾛﾒｯﾄ (ﾛﾜ) Water Pipe Grommet (Lower)	1	1	1	
10-19	3F0-64321-0	ｽﾍﾟｰｻ、10.1-15-72 Spacer, 10.1-15-72	1	1	1	

ギヤケース（プロペラシャフト）
Fig. 11 GEAR CASE (PROPELLER SHAFT)

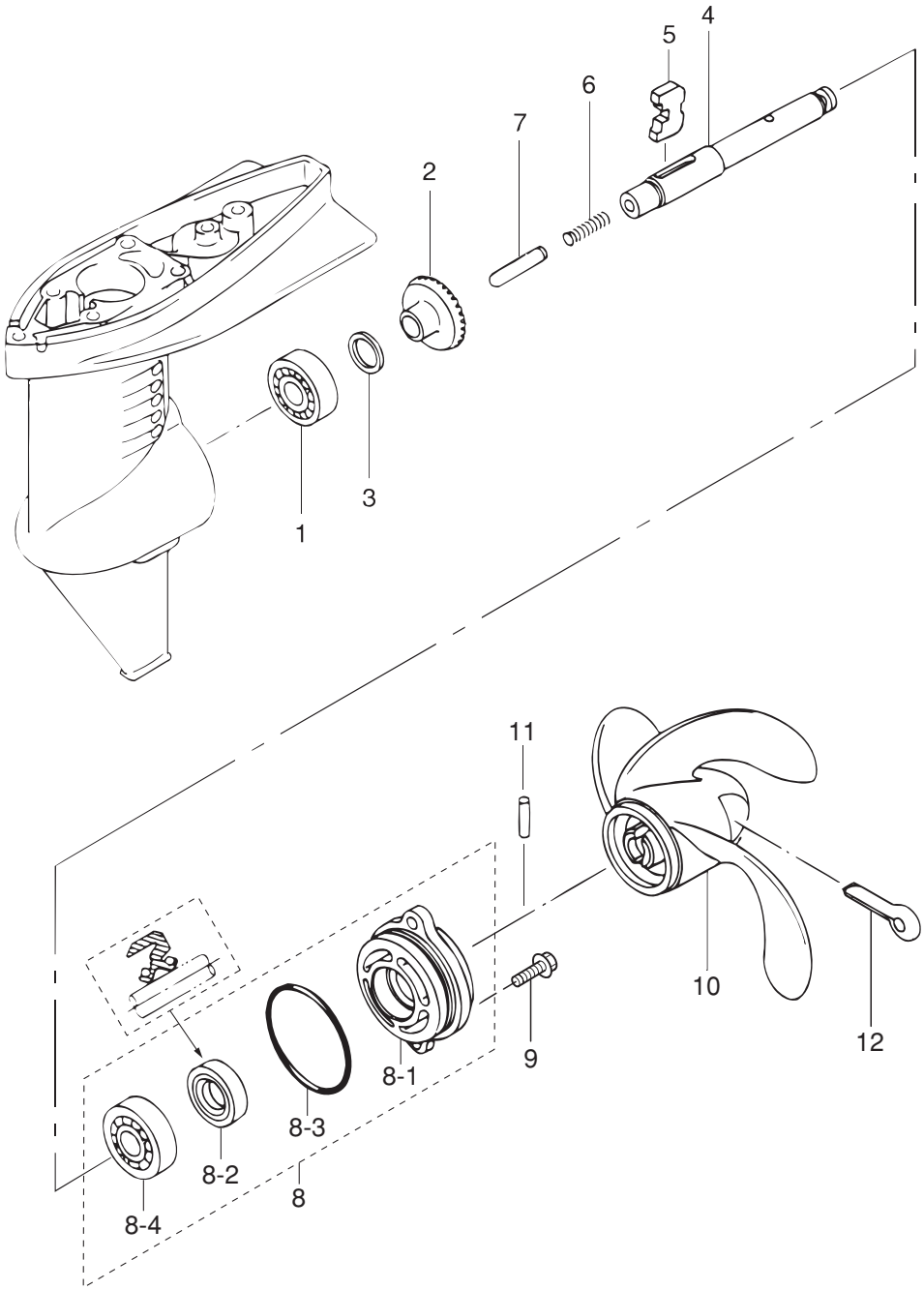

見出番号 Ref. No.	部品番号 Part No.	部　品　名 Description	個数 Q'ty F 3.5 B	F 2.5 B	F 2 B	備　考 Remarks
11-1	9601-0-6004	ﾎﾞｰﾙﾍﾞｱﾘﾝｸﾞ、6004 Ball Bearing, 6004	1	1	1	
11-2	369-64010-2	ﾍﾞﾍﾞﾙｷﾞﾔ A Bevel Gear "A"	1	1	1	
11-3	369-64014-0	ｼﾑ、21-28-0.1 Shim, 21-28-0.1	AR	AR	AR	
	369-64015-0	ｼﾑ、21-28-0.15 Shim, 21-28-0.15	AR	AR	AR	
11-4	3F0-64211-0	ﾌﾟﾛﾍﾟﾗｼｬﾌﾄ Propeller Shaft	1	1	1	
11-5	3F0-64215-0	ｸﾗｯﾁ Clutch	1	1	1	
11-6	3F0-64221-0	ｸﾗｯﾁｽﾌﾟﾘﾝｸﾞ Clutch Spring	1	1	1	
11-7	3F0-64223-0	ｸﾗｯﾁﾌﾟｯｼｭﾛｯﾄﾞ Clutch Push Rod	1	1	1	
11-8	3F0Q87323-1	ﾌﾟﾛﾍﾟﾗｼｬﾌﾄﾊｳｼﾞﾝｸﾞｱｯｼ Propeller Shaft Housing Ass'y	1	1	1	
11-8-1	3F0Q60101-1	ﾌﾟﾛﾍﾟﾗｼｬﾌﾄﾊｳｼﾞﾝｸﾞ * Propeller Shaft Housing	1	1	1	
11-8-2	309-60111-0	ｵｲﾙｼｰﾙ、12-24-8 * Oil Seal, 12-24-8	1	1	1	
11-8-3	345-65015-0	O ﾘﾝｸﾞ、3.2-47 * O-Ring, 3.2-47	1	1	1	
11-8-4	9601-0-6001	ﾎﾞｰﾙﾍﾞｱﾘﾝｸﾞ、6001 * Ball Bearing, 6001	1	1	1	
11-9	9101E3-5620	ﾎﾞﾙﾄ Bolt	2	2	2	or 910113-5620
11-10	3F0-64101-0	ﾌﾟﾛﾍﾟﾗ 7(樹脂)、3×188×178 Propeller 7(Plastic), 3×7.4×7.0	1	1	1	for Transom "S", "L"
	3F0B64512-0	ﾌﾟﾛﾍﾟﾗ 6(ｱﾙﾐ)、3×188×145 Propeller 6(Aluminum), 3×7.4×5.7	1	1	1	Old Part No. 3F0-64102-0 Option
	309-64106-0	ﾌﾟﾛﾍﾟﾗ 6(樹脂)、3×188×145 Propeller 6(Plastic), 3×7.4×5.7	1	1	1	Option
	314-64103-0	ﾌﾟﾛﾍﾟﾗ 4.5(樹脂)、3×188×110 Propeller 4.5(Plastic), 3×7.4×4.3	1	1	1	Option
11-11	309-64126-1	ｼｬｰﾋﾟﾝ、4-24 Shear Pin, 4-24	1	1	1	# 048350XG～
11-12	951503-0435	ｽﾌﾟﾘｯﾄﾋﾟﾝ、4-35 Split Pin, 4-35	1	1	1	

シフト
Fig. 12 SHIFT

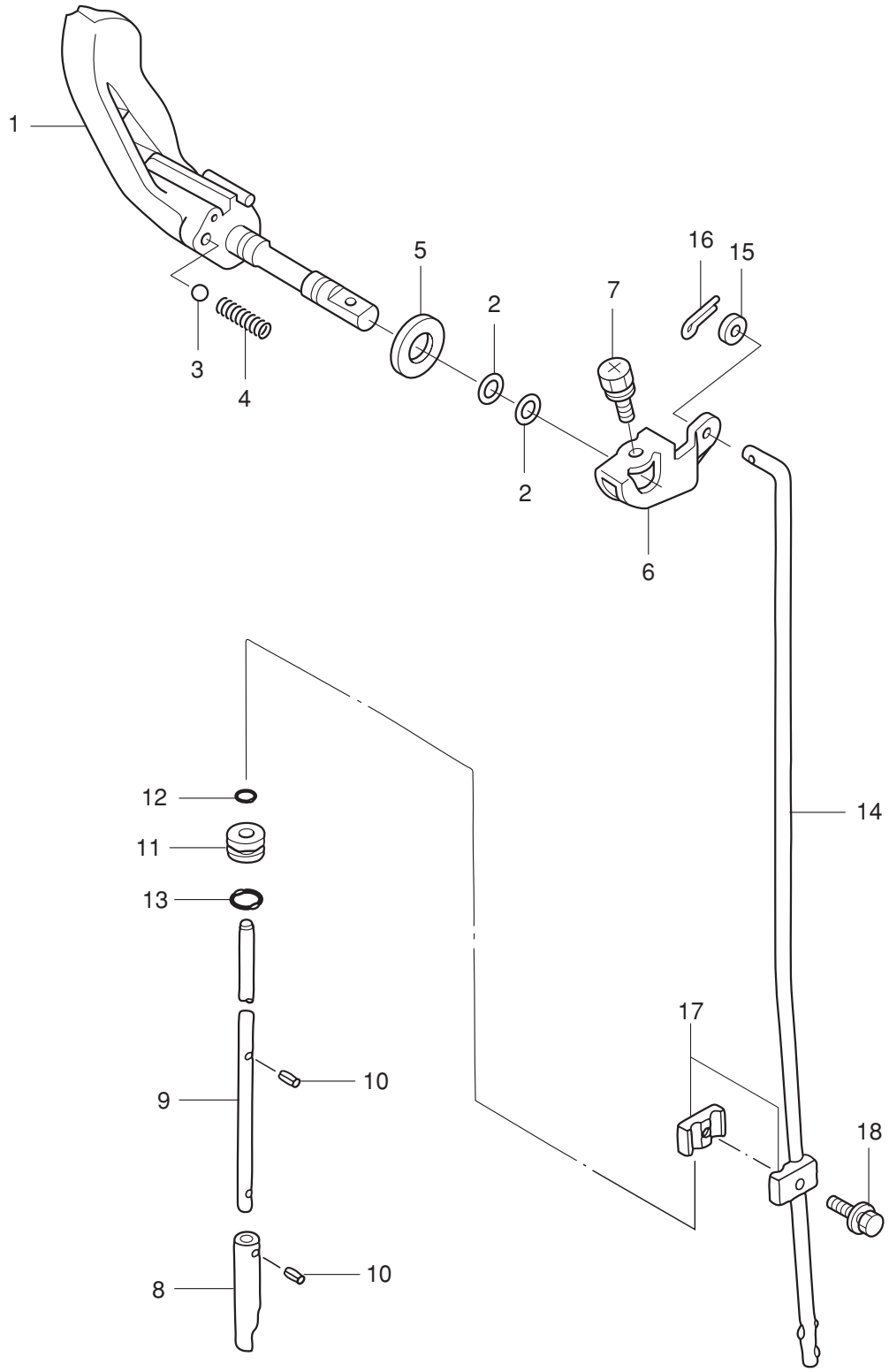

見出番号 Ref. No.	部品番号 Part No.	部　品　名 Description	個数 Q'ty F 3.5 B	F 2.5 B	F 2 B	備　考 Remarks
12-1	3AB-66130-0	ｼﾌﾄﾚﾊﾞｰ Shift Lever	1	1	1	
12-2	345-66021-0	O ﾘﾝｸﾞ、1.9-6.8 O-Ring, 1.9-6.8	2	2	2	
12-3	369-66116-0	ｾﾗﾐｯｸﾎﾞｰﾙ、7.7 Ceramic Ball, 7.7	1	1	1	
12-4	369-66112-1	ｼﾌﾄﾚﾊﾞｰｽﾄｯﾊﾟｽﾌﾟﾘﾝｸﾞ Shift Lever Stopper Spring	1	1	1	
12-5	332-61315-0	ﾜｯｼｬ、10.5-18-1.5 Washer, 10.5-18-1.5	1	1	1	
12-6	3AB-66225-0	ｼﾌﾄﾛｯﾄﾞﾚﾊﾞｰ Shift Rod Lever	1	1	1	
12-7	910903-6512	ﾎﾞﾙﾄ Bolt	1	1	1	
12-8	3F0-66011-0	ｸﾗｯﾁｶﾑ Clutch Cam	1	1	1	
12-9	3F0-66012-0	ｶﾑﾛｯﾄﾞ S Cam Rod "S"	1	1	1	for Transom "S"
	3F0-66013-0	ｶﾑﾛｯﾄﾞ L Cam Rod "L"	1	1	1	for Transom "L"
12-10	951407-0308	ｽﾌﾟﾘｸﾞﾋﾟﾝ、3-8 Spring Pin, 3-8	2	2	2	
12-11	3F0-66031-0	ｶﾑﾛｯﾄﾞﾌﾞｯｼﾝｸﾞ Cam Rod Bushing	1	1	1	
12-12	369-66021-1	O ﾘﾝｸﾞ、2.5-4.9 O-Ring, 2.5-4.9	1	1	1	
12-13	301-66023-0	O ﾘﾝｸﾞ、2.4-9.5 O-Ring, 2.4-9.5	1	1	1	
12-14	3AB-66214-0	ｼﾌﾄﾛｯﾄﾞ Shift Rod	1	1	1	
12-15	940103-0600	ﾜｯｼｬ Washer	1	1	1	
12-16	951503-0212	ｽﾌﾟﾘｯﾄﾋﾟﾝ、2-12 Split Pin, 2-12	1	1	1	
12-17	369-66241-0	ｼﾌﾄﾛｯﾄﾞｼﾞｮｲﾝﾄ Shift Rod Joint	1 set	1 set	1 set	
12-18	910103-5616	ﾎﾞﾙﾄ Bolt	1	1	1	

クランプブラケット & スイベルブラケット
Fig. 13 CLAMP BRACKET & SWIVEL BRACKET

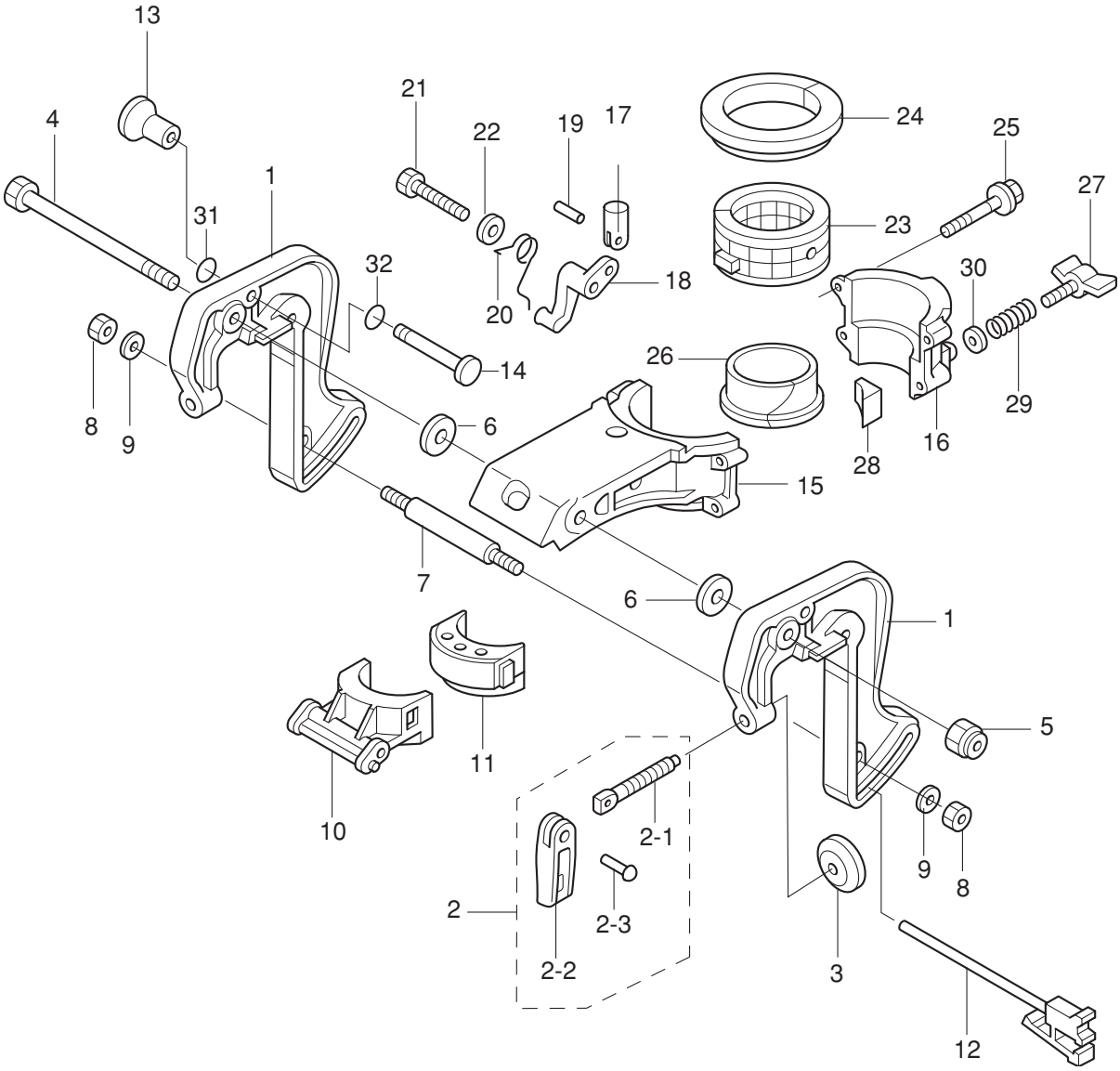

見出番号 Ref. No.	部品番号 Part No.	部　品　名 Description	個数 Q'ty F 3.5 B	F 2.5 B	F 2 B	備　考 Remarks
13-1	3ABQ62111-2	ｸﾗﾝﾌﾟﾌﾞﾗｹｯﾄ (ﾁﾙﾄﾋﾟﾝ穴φ10) Clamp Bracket (Tilt pin hole φ10)	2	2	2	New (for fig. 13-31, O-Ring) # 036145XG～
	3ABQ62111-1	ｸﾗﾝﾌﾟﾌﾞﾗｹｯﾄ (ﾁﾙﾄﾋﾟﾝ穴φ10) Clamp Bracket (Tilt pin hole φ10)	(2)	(2)	(2)	Old (for fig. 13-32, O-Ring) # 031347XG～# 031578XG
	3ABQ62111-0	ｸﾗﾝﾌﾟﾌﾞﾗｹｯﾄ (ﾁﾙﾄﾋﾟﾝ穴φ8) Clamp Bracket (Tilt pin hole φ8)	(2)	(2)	(2)	Old (without O-Ring) ～# 031346XG
13-2	3AB-62100-1	ｸﾗﾝﾌﾟｽｸﾘｭｱｯｼ Clamp Screw Ass'y	2	2	2	
13-2-1	369-62103-1	ｸﾗﾝﾌﾟｽｸﾘｭ ＊ Clamp Screw	2	2	2	
13-2-2	3AB-62102-0	ｸﾗﾝﾌﾟｽｸﾘｭﾊﾝﾄﾞﾙ ＊ Clamp Screw Handle	2	2	2	
13-2-3	3C8-62104-2	ﾘﾍﾞｯﾄ、3-22 ＊ Rivet, 3-22	2	2	2	or 3C8-62104-1
13-3	332-62101-1	ｸﾗﾝﾌﾟｽｸﾘｭﾊﾟｯﾄﾞ Clamp Screw Pad	2	2	2	
13-4	309-62115-2	ﾎﾞﾙﾄ、8-122 Bolt, 8-122	1	1	1	
13-5	930403-0800	ﾅｲﾛﾝﾅｯﾄ、8-P1.25 Nylon Nut, 8-P1.25	1	1	1	
13-6	307-62116-1	ﾜｯｼｬ、8.5-28-1 Washer, 8.5-28-1	2	2	2	
13-7	309-62117-1	ﾃﾞｨｽﾀﾝｽﾋﾟｰｽ Distance Piece	1	1	1	Old Part No. 309-62118-0
13-8	9301E3-0600	ﾅｯﾄ Nut	2	2	2	or 930113-0600
13-9	9401E3-0600	ﾜｯｼｬ Washer	2	2	2	or 940113-0600
13-10	3AB-62212-0	ｽﾗｽﾄｻﾎﾟｰﾀ Thrust Supporter	1	1	1	
13-11	3AB-61336-1	ﾀﾞﾝﾊﾟ (ﾛﾜ) Damper (Lower)	1	1	1	
13-12	3F0-62160-0	ｽﾗｽﾄﾛｯﾄﾞ Thrust Rod	1	1	1	
13-13	309-62463-0	ﾁﾙﾄｽﾄｯﾊﾟﾉﾌﾞ Tilt Stopper Knob	1	1	1	
13-14	3AB-62464-3	ﾁﾙﾄｽﾄｯﾊﾟ、φ10 (O ﾘﾝｸﾞ無し) Tilt Stopper, φ10 (without O-Ring)	1	1	1	New # 036145XG～
	3AB-62464-0	ﾁﾙﾄｽﾄｯﾊﾟ、φ10 (O ﾘﾝｸﾞ付) Tilt Stopper, φ10 (with O-Ring)	(1)	(1)	(1)	Old, with O-Ring (fig 13-32) # 031347XG～～# 031578XG
	309-62464-0	ﾁﾙﾄｽﾄｯﾊﾟ、φ8 (O ﾘﾝｸﾞ無し) Tilt Stopper, φ8 (without O-Ring)	(1)	(1)	(1)	Old ～# 031346XG
13-15	3ABQ62391-1	ｽｲﾍﾞﾙﾌﾞﾗｹｯﾄ A Swivel Bracket "A"	1	1	1	
13-16	3ABQ62392-1	ｽｲﾍﾞﾙﾌﾞﾗｹｯﾄ B Swivel Bracket "B"	1	1	1	
13-17	3AB-66334-1	ｽﾃｱﾘﾝｸﾞｽﾄｯﾊﾟ Steering Stopper	1	1	1	
13-18	3AB-63068-0	ｽﾄｯﾊﾟﾚﾊﾞｰ Stopper Lever	1	1	1	
13-19	951403-0212	ｽﾌﾟﾘﾝｸﾞﾋﾟﾝ、2-12 Spring Pin, 2-12	1	1	1	
13-20	3AB-66336-0	ｽﾄｯﾊﾟﾚﾊﾞｰｽﾌﾟﾘﾝｸﾞ Stopper Lever Spring	1	1	1	
13-21	9161E3-0650	ﾎﾞﾙﾄ Bolt	1	1	1	or 916113-0650
13-22	9401E3-0600	ﾜｯｼｬ Washer	1	1	1	or 940113-0600
13-23	393-62416-0	ｽﾃｱﾘﾝｸﾞﾌﾞｯｼﾝｸﾞ Steering Busing	1	1	1	

クランプブラケット & スイベルブラケット
Fig. 13 CLAMP BRACKET & SWIVEL BRACKET

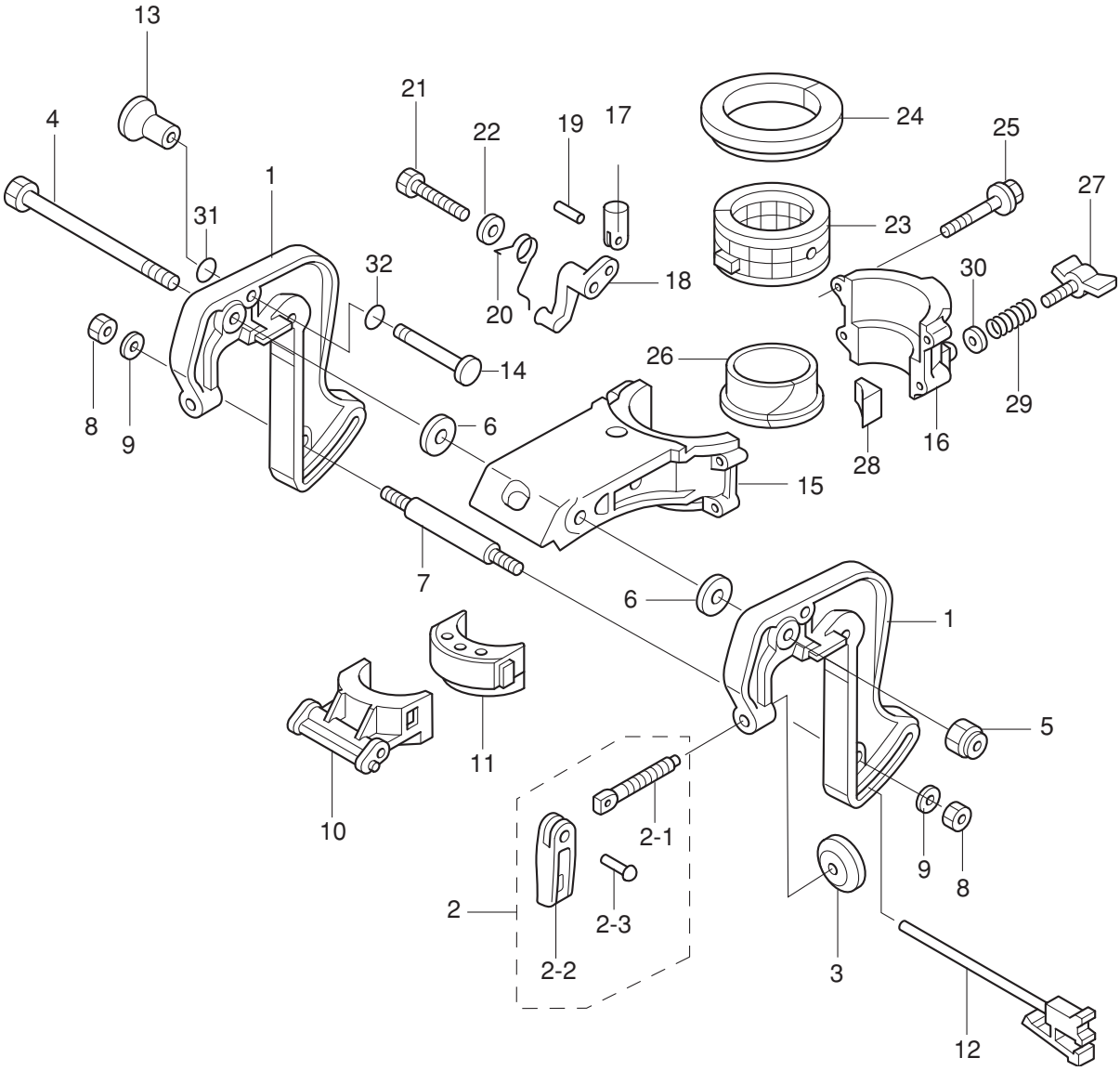

見出番号 Ref. No.	部品番号 Part No.	部　品　名 Description	個数 Q'ty F 3.5 B	F 2.5 B	F 2 B	備　考 Remarks
13-24	3H6-62325-0	ｽﾗｽﾄﾌﾞｯｼﾝｸﾞ Thrust Bushing	1	1	1	
13-25	3V1-60001-1	ﾎﾞﾙﾄ、6-35 ﾌﾟﾚｺｰﾄ Bolt, 6-35 Pre-coated	4	4	4	
13-26	3AB-62321-1	ﾋﾟﾎﾞｯﾄﾌﾞｯｼﾝｸﾞ（黒） Pivot Bushing (Black)	1	1	1	New # 022154XG～
	309-62321-1	ﾋﾟﾎﾞｯﾄﾌﾞｯｼﾝｸﾞ（白） Pivot Bushing (White)	(1)	(1)	(1)	Old ～# 016969XG
13-27	309Q62442-2	ﾌﾘｸｼｮﾝﾌﾟﾚｰﾄｽｸﾘｭ Friction Plate Screw	1	1	1	
13-28	309-62441-2	ﾌﾘｸｼｮﾝﾌﾟﾚｰﾄ Friction Plate	1	1	1	
13-29	309-62446-1	ﾌﾘｸｼｮﾝｽﾌﾟﾘﾝｸﾞ Friction Spring	1	1	1	
13-30	9401E3-0600	ﾜｯｼｬ Washer	1	1	1	or 940113-0600
13-31	301-66023-0	O ﾘﾝｸﾞ、2.4-9.5 O-Ring, 2.4-9.5	1	1	1	New # 036145XG～
13-32	3AB-10164-0	O ﾘﾝｸﾞ、1.25-8 O-Ring, 1.25-8	(1)	(1)	(1)	Old

インテグラルフュエルタンク
Fig. 14 INTEGRAL FUEL TANK

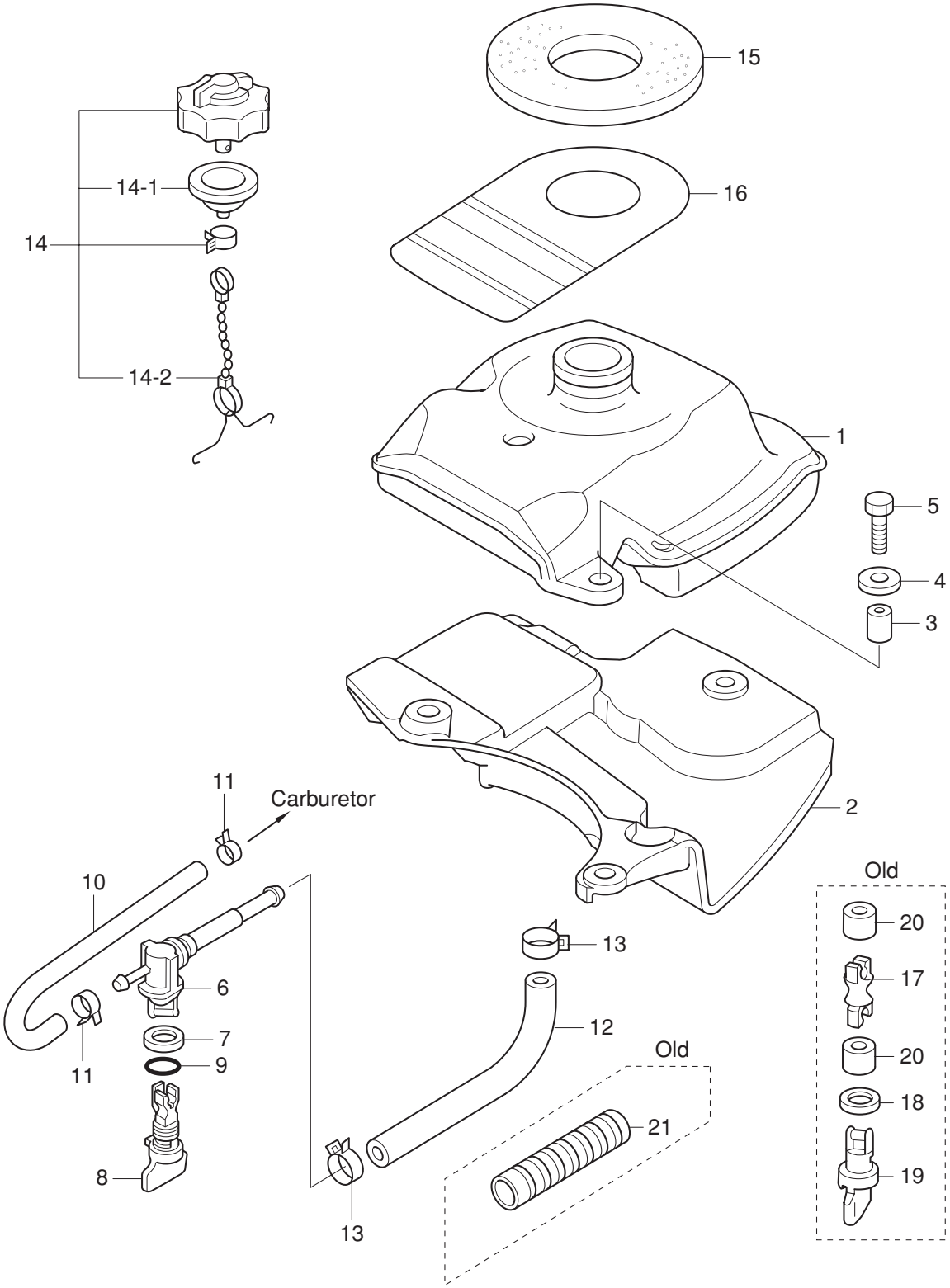

見出番号 Ref. No.	部品番号 Part No.	部　品　名 Description	個数 Q'ty F 3.5 B	F 2.5 B	F 2 B	備　考 Remarks
14-1	3AB-70310-1	ﾌｭｴﾙﾀﾝｸ Fuel Tank	1	1	1	
14-2	3AB-06846-1	ﾌｭｴﾙﾀﾝｸｶﾊﾞｰ Fuel Tank Cover	1	1	1	
14-3	3T5-76079-0	ｶﾗｰ、6.2-9-10.7 Collar, 6.2-9-10.7	3	3	3	
14-4	3C8-66308-0	ﾜｯｼｬ、6-16-1.5 Washer, 6-16-1.5	3	3	3	
14-5	9101E3-0625	ﾎﾞﾙﾄ Bolt	3	3	3	or 910113-0625
14-6	369-70311-0	ﾌｭｴﾙｺｯｸ Fuel Cock	1	1	1	
14-7	369-70063-0	ｼｰﾙﾘﾝｸﾞ Seal Ring	1	1	1	
14-8	3GT-70062-0	ﾌｭｴﾙｺｯｸﾉﾌﾞ Fuel Cock Knob	1	1	1	3.5B/2.5B/2B～
14-9	3G9-66136-0	O ﾘﾝｸﾞ、2-10 O-Ring, 2-10	1	1	1	3.5B/2.5B/2B～
14-10	3GT-70326-0	ﾌｭｴﾙﾎｰｽ Fuel Hose	1	1	1	3.5B/2.5B/2B～
	3AB-70326-0	ﾌｭｴﾙﾎｰｽ (旧) Fuel Hose (Old)	(1)	(1)	(1)	3.5A/2.5A/2A
14-11	3AB-35143-0	ｸﾘｯﾌﾟ、φ9.5 Clip, φ9.5	2	2	2	or 121-35143-0
14-12	3GT-70325-0	ﾌｭｴﾙﾎｰｽ (ｽﾄﾚｰﾄ) Fuel Hose (Straight)	1	1	1	L=215 3.5B/2.5B/2B～
	3AB-70325-0	ﾌｭｴﾙﾎｰｽ (旧) Fuel Hose (Old)	(1)	(1)	(1)	3.5A/2.5A/2A
14-13	3AB-02215-1	ｸﾘｯﾌﾟ、φ15 Clip, φ15	2	2	2	or 3AB-02215-0
14-14	3R6-70320-1	ﾌｭｴﾙﾀﾝｸｷｬｯﾌﾟ Fuel Tank Cap	1	1	1	
14-14-1	309-70021-3	ﾀﾝｸｷｬｯﾌﾟｶﾞｽｹｯﾄ * Tank Cap Gasket	1	1	1	
14-14-2	3C8-71017-0	ﾀﾝｸｷｬｯﾌﾟﾌｯｸ * Tank Cap Hook	1	1	1	
14-15	3AB-70036-0	ﾌｭｴﾙﾀﾝｸｼｰﾙ Fuel Tank Seal	1	1	1	
14-16	3AB-72183-0	ｺｰｼｮﾝﾀｸﾞ B Caution Tag "B"	1	1	1	
14-17	3AB-70061-0	ﾌｭｴﾙｺｯｸﾛｯﾄﾞ (旧) Fuel Cock Rod (Old)	(1)	(1)	(1)	3.5A/2.5A/2A
14-18	369-70063-0	ｼｰﾙﾘﾝｸﾞ (旧) Seal Ring (Old)	(1)	(1)	(1)	3.5A/2.5A/2A
14-19	369-70062-0	ﾌｭｴﾙｺｯｸﾉﾌﾞ (旧) Fuel Cock Knob (Old)	(1)	(1)	(1)	3.5A/2.5A/2A
14-20	353-72544-1	ﾌｭｴﾙｺｯｸﾛｯﾄﾞﾎｰｽ (旧) Fuel Cock Rod Hose (Old)	(1)	(1)	(1)	3.5A/2.5A/2A
14-21	3AB-70313-0	ﾌｭｴﾙﾎｰｽﾌﾟﾛﾃｸﾀ (旧) Fuel Hose Protector (Old)	(1)	(1)	(1)	3.5A/2.5A/2A

Fig. 15 カウル COWL

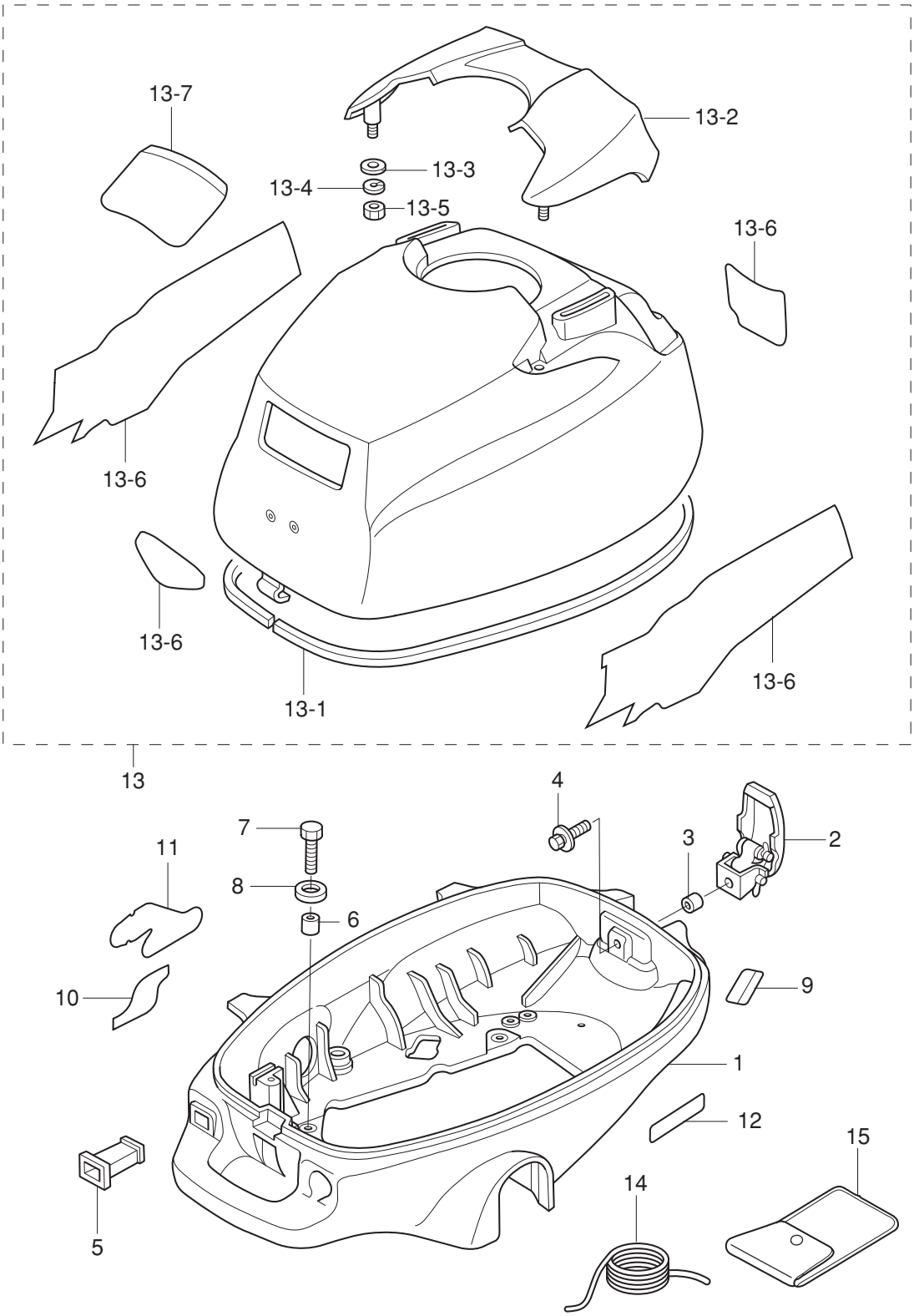

見出番号 Ref. No.	部品番号 Part No.	部　品　名 Description	個数 Q'ty F 3.5 B	F 2.5 B	F 2 B	備　考 Remarks
15-1	3ABQ67100-0	ﾎﾞﾄﾑｶｳﾙ Bottom Cowl	1	1	1	
15-2	3GT-67120-0	ｶｳﾙﾗｯﾁ Cowl Latch	1	1	1	3.5B/2.5B/2B～
	3V1-67120-0	ｶｳﾙﾗｯﾁ Cowl Latch	(1)	(1)	(1)	3.5A/2.5A/2A
15-3	3A0-76079-0	ｶﾗｰ、6.2-9-7.4 Collar, 6.2-9-7.4	1	1	1	
15-4	9101E3-5616	ﾎﾞﾙﾄ Bolt	1	1	1	or 910113-5616
15-5	3AB-67104-0	ﾁｮｰｸﾛｯﾄﾞﾌﾞｯｼﾝｸﾞ Choke Rod Bushing	1	1	1	
15-6	353-06283-0	ｶﾗｰ、6.4-10-4.7 Collar, 6.4-10-4.7	4	4	4	
15-7	9101E3-0616	ﾎﾞﾙﾄ Bolt	4	4	4	or 910113-0616
15-8	3C8-66308-0	ﾜｯｼｬ、6-16-1.5 Washer, 6-16-1.5	4	4	4	
15-9	3H6-72026-0	ｽﾊﾟｰｸﾌﾟﾗｸﾞﾃﾞｶﾙ (ﾚｼﾞｽﾀﾝｽ) Spark Plug Decal (with Resistance)	1	1	1	
15-10	3AB-67578-0	ｼﾌﾄﾃﾞｶﾙ (F-N) Shift Decal (F-N)	1	1	1	
15-11	3AB-72024-1	ﾌｭｴﾙﾚﾊﾞｰﾃﾞｶﾙ Fuel Lever Decal	1	1	1	# 048350XG～
15-12	3AB-67572-0	ｽﾄｰﾘｯｼﾞﾃﾞｶﾙ Storage Decal	1	1	1	
15-13	3ABQ67645-0	ﾄｯﾌﾟｶｳﾙ Top Cowl	1	1	1	Old Part No 3BRQ67630-2 UNIQUE
15-13-1	3AB-67501-0	ﾄｯﾌﾟｶｳﾙｼｰﾙ ＊ Top Cowl Seal	1	1	1	L=1100
15-13-2	3ABQ67521-2	ﾁﾙﾄﾊﾝﾄﾞﾙ ＊ Tilt Handle	1	1	1	
15-13-3	940103-0600	ﾜｯｼｬ ＊ Washer	4	4	4	
15-13-4	941303-0600	ｽﾌﾟﾘﾝｸﾞﾜｯｼｬ ＊ Spring Washer	4	4	4	
15-13-5	930103-0600	ﾅｯﾄ ＊ Nut	4	4	4	
15-13-6	3BR-87801-0	ﾃﾞｶﾙｾｯﾄ ＊ Decal Set	1 set	-	-	Old Part No 3BRQ87801-0 UNIQUE
	3AB-87801-0	ﾃﾞｶﾙｾｯﾄ ＊ Decal Set	-	1 set	-	Old Part No 3ABQ87801-0 UNIQUE
	3BV-87801-0	ﾃﾞｶﾙｾｯﾄ ＊ Decal Set	-	-	1 set	Old Part No. 3BVQ87801-0
15-13-7	3R0-72180-0	ｺｰｼｮﾝﾃﾞｶﾙ A ＊ Caution Decal “A”	1	1	1	
15-14	312-72201-0	ﾛｰﾌﾟ Rope	1	1	1	φ4-1000
15-15	3H6-72100-0	ﾂｰﾙ Tool	1	1	1	

オプショナルパーツ & アクセサリー

Fig. 16 OPTIONAL PARTS & ACCESSORIES

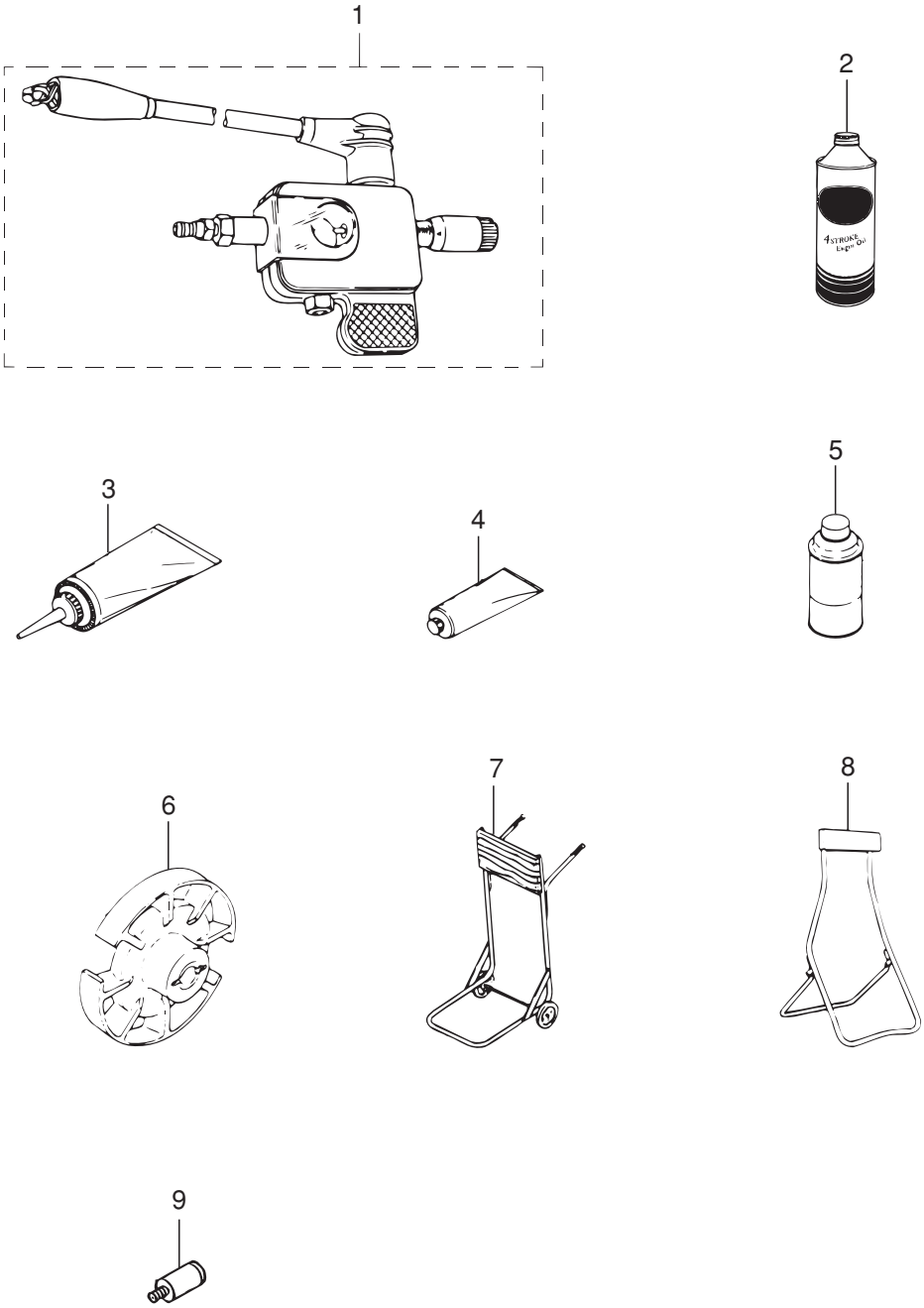

見出番号 Ref. No.	部品番号 Part No.	部　品　名 Description	個数 Q'ty F 3.5 B	F 2.5 B	F 2 B	備　考 Remarks
16-1	3F3-72540-0	ｽﾊﾟｰｸﾃｽﾀ Spark Tester	1	1	1	
16-2	3AC-72300-0	ｴﾝｼﾞﾝｵｲﾙ (1L) Engine Oil (1L)	1	1	1	N.A.F.N.
16-3	332-72306-0	ｷﾞﾔｵｲﾙ (500mL) Gear Oil (500mL)	1	1	1	20 tubes/case N.A.F.N.
16-4	332-72309-0	ｸﾞﾘｽ (250g) Grease (250g)	1	1	1	24 tubes/case N.A.F.N.
16-5	3AC-72326-0	ｽﾌﾟﾚｰ (ｱｸｱﾏﾘﾝﾌﾞﾙｰ) Touch-up Paint (Aquamarine Blue)	1	1	1	N.A.F.N.
16-6	3AB-64111-0	ﾃｽﾄﾌﾟﾛﾍﾟﾗ Test Propeller	1	1	1	φ120-W16
16-7	332-72401-0	ｶｰﾄ Cart	1	1	1	
16-8	332-72402-0	ｽﾀﾝﾄﾞ Stand	1	1	1	
16-9	336-60007-0	ﾌﾗｯｼﾝｸﾞｱﾀｯﾁﾒﾝﾄ Flushing Attachment	1	1	1	

アッセンブリキット
Fig. 17 ASSEMBLY KIT

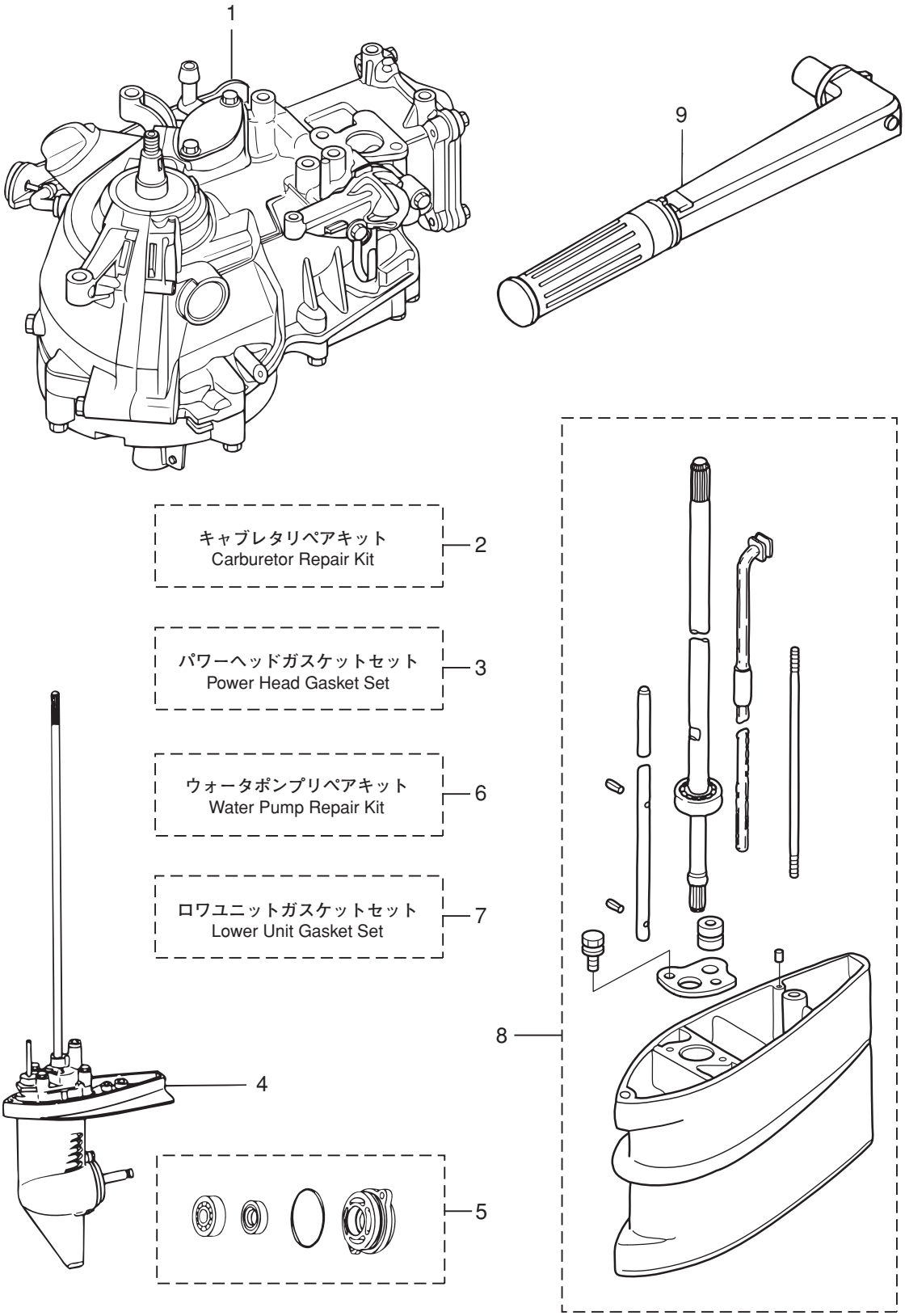

見出番号 Ref. No.	部品番号 Part No.	部　品　名 Description	個数 Q'ty F 3.5 B	F 2.5 B	F 2 B	備　考 Remarks
17-1	3GTB87090-2	ｴﾝｼﾞﾝｼｮｰﾄﾌﾞﾛｯｸｷｯﾄ Engine Short Block Kit	1	1	1	3.5B/2.5B/2B～
	3AB-01290-0	ｸﾗﾝｸｹｰｽﾍｯﾄﾞｱｯｼ ＊ Crank Case Head Ass'y	1	1	1	with Oil Seal & O-Ring
	9101E3-5620	ﾎﾞﾙﾄ ＊ Bolt	2	2	2	or 910113-5620
	3AB-61012-0	ﾄﾞﾗｲﾌﾞｼｬﾌﾄﾊｳｼﾞﾝｸﾞｶﾞｽｹｯﾄ ＊ Drive Shaft Housing Gasket	1	1	1	
	9701-1-1103	ｽﾊﾟｰｸﾌﾟﾗｸﾞ ＊ Spark Plug	1	1	1	NGK: DCPR6E
17-2	3GT-87122-0	ｷｬﾌﾞﾚﾀﾘﾍﾟｱｷｯﾄ Carburetor Repair Kit	1 set	1 set	1 set	3.5B/2.5B/2B～
(17-2)	3AB-87122-0	ｷｬﾌﾞﾚﾀﾘﾍﾟｱｷｯﾄ (旧) Carburetor Repair Kit (Old)	(1) set	(1) set	(1) set	3.5A/2.5A/2A
	3GT-03231-0	ﾌﾛｰﾄ ＊ Float	1	1	1	3.5B/2.5B/2B～ Fig. 3-1-4
(17-2)	3AB-03231-0	ﾌﾛｰﾄ (旧) ＊ Float (Old)	(1)	(1)	(1)	3.5A/2.5A/2A
	3H6-03240-0	ﾌﾛｰﾄﾊﾞﾙﾌﾞ ＊ Float Valve	1	1	1	Fig. 3-1-5
	3H6-03244-0	ｸﾘｯﾌﾟ ＊ Clip	1	1	1	Fig. 3-1-6
	3H6-03232-0	ﾌﾛｰﾄｱｰﾑﾋﾟﾝ ＊ Float Arm Pin	1	1	1	Fig. 3-1-7
	3H6-03222-0	ﾌﾛｰﾄﾁｬﾝﾊﾞ O ﾘﾝｸﾞ ＊ Float Chamber O-Ring	1	1	1	Fig. 3-1-9
	922503-6412	ｽｸﾘｭ ＊ Screw	2	2	2	Fig. 3-1-10
	3H6-03293-0	ﾄﾞﾚﾝｽｸﾘｭ O ﾘﾝｸﾞ ＊ Drain Screw O-Ring	1	1	1	Fig. 3-1-12
17-3	3AB-87121-0	ﾊﾟﾜｰﾍｯﾄﾞｶﾞｽｹｯﾄｾｯﾄ Power Head Gasket Set	1	1	1	
	3AB-01024-1	ﾍｯﾄﾞｶﾊﾞｰｶﾞｽｹｯﾄ ＊ Head Cover Gasket	1	1	1	
	3AB-01032-0	ｻｰﾓｽﾀｯﾄｷｬｯﾌﾟｶﾞｽｹｯﾄ ＊ Thermostat Cap Gasket	1	1	1	
	3AB-07432-0	ﾌﾞﾘｰｻﾞﾁｬﾝﾊﾞｶﾊﾞｰｶﾞｽｹｯﾄ ＊ Breather Chamber Cover Gasket	1	1	1	
	3AB-00121-0	ｵｲﾙｼｰﾙ、20-35-7 ＊ Oil Seal, 20-35-7	2	2	2	Crank Shaft
	3H6-03293-0	ﾄﾞﾚﾝｽｸﾘｭ O ﾘﾝｸﾞ ＊ Drain Screw O-Ring	1	1	1	Carburetor
	3H6-02011-0	ｷｬﾌﾞﾚﾀｶﾞｽｹｯﾄ ＊ Carburetor Gasket	2	2	2	
	3AB-02104-0	ｲﾝﾃｰｸﾏﾆﾎｰﾙﾄﾞｶﾞｽｹｯﾄ ＊ Intake Manifold Gasket	1	1	1	
	3AB-07402-0	ｵｲﾙﾊﾟﾝｶﾞｽｹｯﾄ ＊ Oil Pan Gasket	1	1	1	
	3R0-07422-0	O ﾘﾝｸﾞ、3.1-24.4 ＊ O-Ring, 3.1-24.4	1	1	1	Engine Oil Filler Cap
	3AB-01215-0	ｵｲﾙｼｰﾙ、10.1-20-7 ＊ Oil Seal, 10.1-20-7	2	2	2	Drive Shaft
	3V1-02012-0	O ﾘﾝｸﾞ 2.4-35.2 ＊ O-Ring, 2.4-35.2	1	1	1	Crank Case Head
	3AB-61012-0	ﾄﾞﾗｲﾌﾞｼｬﾌﾄﾊｳｼﾞﾝｸﾞｶﾞｽｹｯﾄ ＊ Drive Shaft Housing Gasket	1	1	1	

アッセンブリキット
Fig. 17 ASSEMBLY KIT

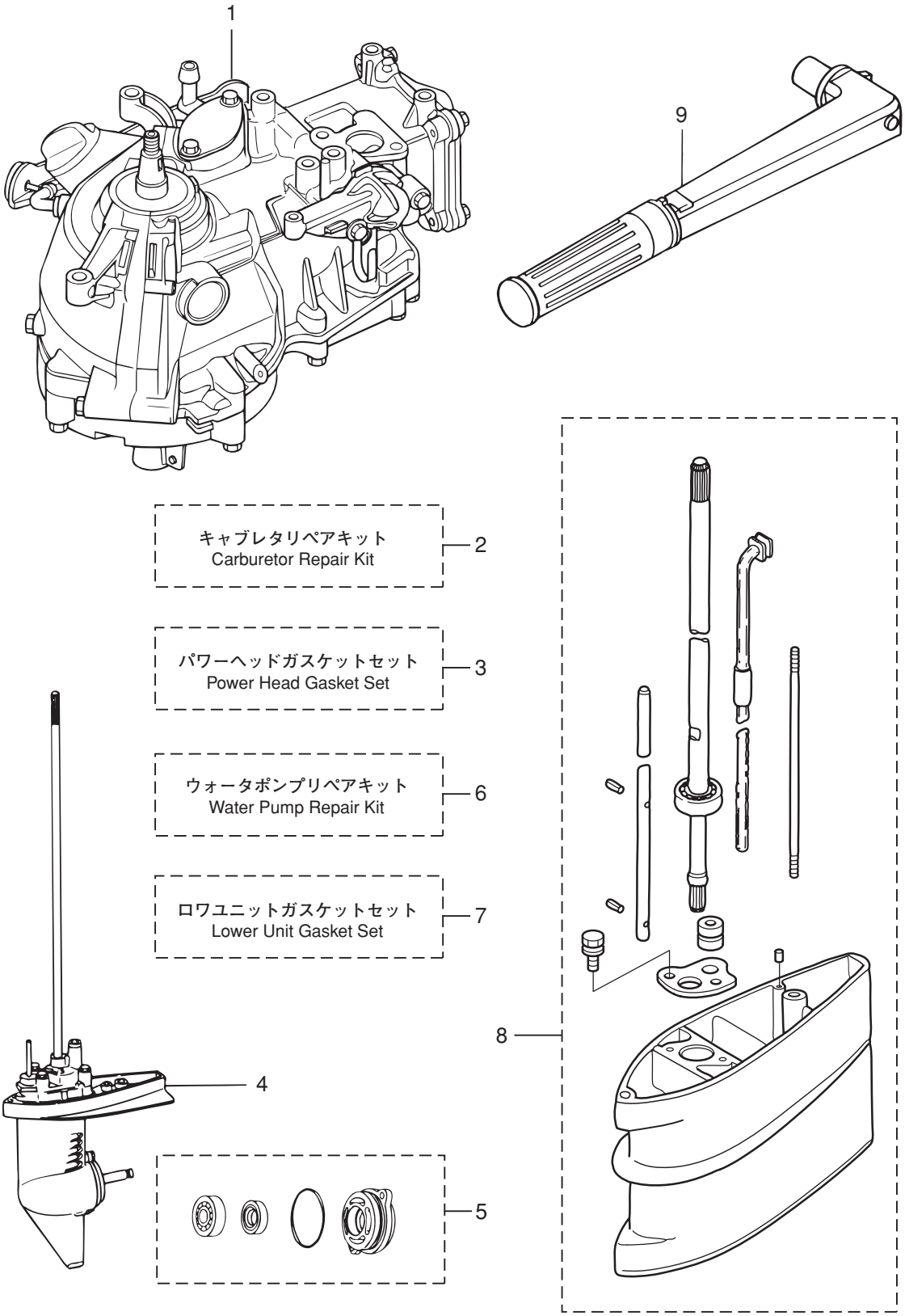

見出番号 Ref. No.	部品番号 Part No.	部　品　名 Description	個数 Q'ty F 3.5 B	F 2.5 B	F 2 B	備　考 Remarks
17-4	3BMQ87301-1	ﾛﾜﾕﾆｯﾄｱｯｼ S Lower Unit Ass'y "S"	1	1	1	or 3BMQ87301-0 for Transom "S"
	3BMQ87302-1	ﾛﾜﾕﾆｯﾄｱｯｼ L Lower Unit Ass'y "L"	1	1	1	or 3BMQ87302-0 for Transom "L"
17-5	3F0Q87323-1	ﾌﾟﾛﾍﾟﾗｼｬﾌﾄﾊｳｼﾞﾝｸﾞｱｯｼ Propeller Shaft Housing Ass'y	1	1	1	
17-6	3AB-87322-0	ｳｫｰﾀﾎﾟﾝﾌﾟﾘﾍﾟｱｷｯﾄ Water Pump Repair Kit	1 set	1 set	1 set	
	369-65021-1	ｳｫｰﾀﾎﾟﾝﾌﾟｲﾝﾍﾟﾗ * Water Pump Impeller	1	1	1	
	369-65022-0	ｳｫｰﾀﾎﾟﾝﾌﾟｲﾝﾍﾟﾗｷｰ * Water Pump Impeller Key	1	1	1	
	3F0-65011-0	ﾎﾟﾝﾌﾟｹｰｽﾗｲﾅ * Pump Case Liner	1	1	1	
	3F0-65018-0	ﾎﾟﾝﾌﾟｹｰｽｶﾞｽｹｯﾄ (ｱｯﾊﾟ) * Pump Case Gasket (Upper)	1	1	1	
	3AB-65025-0	ｳｫｰﾀﾎﾟﾝﾌﾟｶﾞｲﾄﾞﾌﾟﾚｰﾄ * Water Pump Guide Plate	1	1	1	
	3F0-65029-0	ﾎﾟﾝﾌﾟｶﾞｲﾄﾞﾌﾟﾚｰﾄｶﾞｽｹｯﾄ * Pump Guide Plate Gasket	1	1	1	
17-7	3F0-87321-0	ﾛﾜﾕﾆｯﾄｶﾞｽｹｯﾄｾｯﾄ Lower Unit Gasket Set	1 set	1 set	1 set	
	332-60006-0	ｶﾞｽｹｯﾄ、8.1-15-1 * Gasket, 8.1-15-1	2	2	2	
	369-65021-1	ｳｫｰﾀﾎﾟﾝﾌﾟｲﾝﾍﾟﾗ * Water Pump Impeller	1	1	1	
	369-65022-0	ｳｫｰﾀﾎﾟﾝﾌﾟｲﾝﾍﾟﾗｷｰ * Water Pump Impeller Key	1	1	1	
	3F0-65018-0	ﾎﾟﾝﾌﾟｹｰｽｶﾞｽｹｯﾄ (ｱｯﾊﾟ) * Pump Case Gasket (Upper)	1	1	1	
	3F0-65029-0	ﾎﾟﾝﾌﾟｶﾞｲﾄﾞﾌﾟﾚｰﾄｶﾞｽｹｯﾄ * Pump Guide Plate Gasket	1	1	1	
	3F0-60223-0	ｵｲﾙｼｰﾙ、10-22-8 * Oil Seal, 10-22-8	1	1	1	Pump Case Lower
	3F0-65020-0	ﾎﾟﾝﾌﾟｹｰｽｶﾞｽｹｯﾄ (ﾛﾜ) * Pump Case Gasket (Lower)	1	1	1	
	309-60111-0	ｵｲﾙｼｰﾙ、12-24-8 * Oil Seal, 12-24-8	1	1	1	Propeller Shaft
	345-65015-0	O ﾘﾝｸﾞ、3.2-47 * O-Ring, 3.2-47	1	1	1	Propeller Shaft Housing
	369-66021-1	O ﾘﾝｸﾞ、2.5-4.9 * O-Ring, 2.5-4.9	1	1	1	Cam Rod
	301-66023-0	O ﾘﾝｸﾞ、2.4-9.5 * O-Ring, 2.4-9.5	1	1	1	Bushing
17-8	3ABQ87312-0	ｴｸｽﾃﾝｼｮﾝﾊｳｼﾝｸﾞｷｯﾄ L Extension Housing Kit "L"	1 set	1 set	1 set	for Transom "L"
	3ABQ61100-0	ｴｸｽﾃﾝｼｮﾝﾊｳｼﾞﾝｸﾞ L * Extension Housing " L"	1	1	1	Fig. 9-8
	3AB-60003-0	ﾄﾞﾗｲﾌﾞｼｬﾌﾄﾌﾞｯｼﾝｸﾞ * Drive Shaft Bushing	1	1	1	Fig. 9-9
	3AB-64332-0	ﾄﾞﾗｲﾌﾞｼｬﾌﾄﾌﾞｯｼﾝｸﾞｽﾄｯﾊﾟ * Drive Shaft Bushing Stopper	1	1	1	Fig. 9-10

アッセンブリキット
Fig. 17 ASSEMBLY KIT

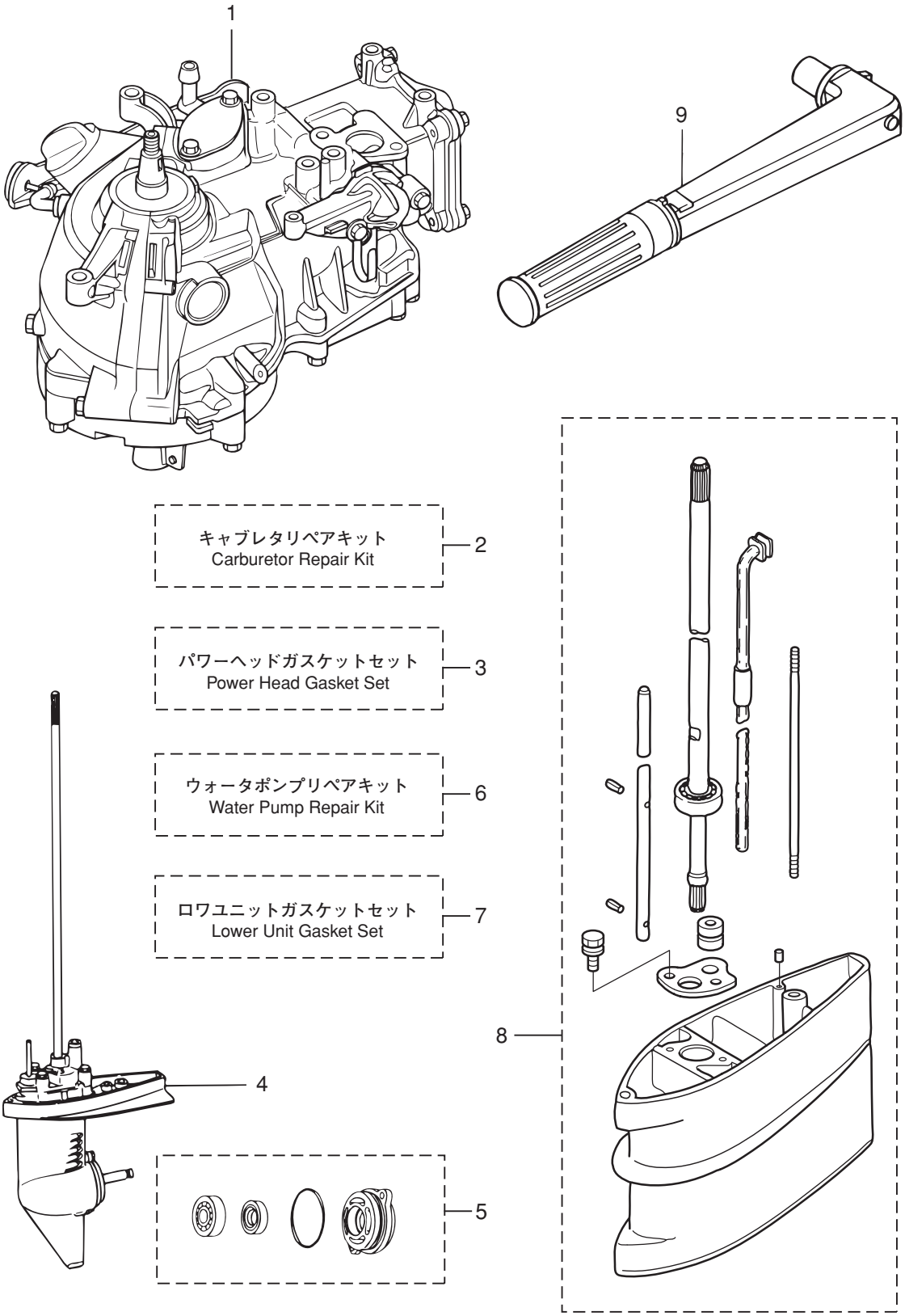

見出番号 Ref. No.	部品番号 Part No.	部　品　名 Description	個数 Q'ty F 3.5 B	F 2.5 B	F 2 B	備　考 Remarks
17-8	172-36008-0	ｸﾞﾛﾒｯﾄ、13-2 ＊ Grommet, 13-2	1	1	1	Fig. 9-11
	9101E3-5612	ﾎﾞﾙﾄ ＊ Bolt	2	2	2	or 910113-5612 Fig. 9-12
	3F0-61101-1	ｽﾀｯﾄﾞﾎﾞﾙﾄ、6-171 ＊ Stud Bolt, 6-171	1	1	1	Fig. 9-13
	9301E3-0600	ﾅｯﾄ ＊ Nut	1	1	1	or 930113-0600 Fig. 9-14
	3AB-60001-1	ﾎﾞﾙﾄ、6-30 ﾌﾟﾚｺｰﾄ ＊ Bolt, 6-30 Pre-coated	1	1	1	Fig. 9-15
	3AB-64307-0	ﾄﾞﾗｲﾌﾞｼｬﾌﾄ L ＊ Drive Shaft "L"	1	1	1	Fig. 10-1
	3F0-66013-0	ｶﾑﾛｯﾄﾞ L ＊ Cam Rod "L"	1	1	1	Fig. 12-9
	951407-0308	ｽﾌﾟﾘﾝｸﾞﾋﾟﾝ、3-8 ＊ Spring Pin, 3-8	2	2	2	Fig. 12-10
	3AB-65192-0	ｳｫｰﾀﾊﾟｲﾌﾟ　L ＊ Water Pipe "L"	1	1	1	Fig. 10-17
	3AB-01111-0	ﾀﾞｳｴﾙﾋﾟﾝ、6-12 ＊ Dowel Pin, 6-12	1	1	1	Fig. 9-25
17-9	3V1Q63003-3	ﾃｨﾗﾊﾝﾄﾞﾙｱｯｼ Tiller Handle Ass'y	1	1	1	or 3V1Q63003-2
	3V1Q63011-2	ﾃｨﾗﾊﾝﾄﾞﾙ ＊ Tiller Handle	1	1	1	or 3V1Q63011-1
	3R3-63012-0	ｸﾞﾘｯﾌﾟ ＊ Grip	1	1	1	
	3H6-63048-0	ｽﾛｯﾄﾙｼｬﾌﾄﾀﾞﾝﾊﾟ ＊ Throttle Shaft Damper	1	1	1	
	3H6-63510-0	ﾌﾞｯｼﾝｸﾞ、14-15.8-7 ＊ Bushing, 14-15.8-7	1	1	1	
	9208E3-0518	ｽｸﾘｭ ＊ Screw	1	1	1	or 920813-0518
	3B2-63063-0	ｽﾛｯﾄﾙｼｬﾌﾄｻﾎﾟｰﾀ ＊ Throttle Shaft Supporter	1	1	1	
	921503-0612	ｽｸﾘｭ ＊ Screw	1	1	1	or 921513-0612
	3V1-63035-1	ﾌﾘｸｼｮﾝﾋﾟｰｽ ＊ Friction Piece	1	1	1	
	3V1-63077-0	ｱｼﾞｬｽﾄﾅｯﾄ ＊ Adjusting Nut	1	1	1	
	3V1-63036-0	ｽﾌﾟﾘﾝｸﾞ ＊ Spring	1	1	1	
	910103-0625	ﾎﾞﾙﾄ ＊ Bolt	1	1	1	or 910113-0625
	3V9-72019-0	ｽﾛｯﾄﾙﾃﾞｶﾙ ＊ Throttle Decal	1	1	1	
	3V1-63041-0	ｽﾛｯﾄﾙｼｬﾌﾄ ＊ Throttle Shaft	1	1	1	
	350-67154-0	ﾌﾟﾗｽﾁｯｸﾘﾍﾞｯﾄ、6.5 ＊ Plastic Rivet, 6.5	1	1	1	

Note

Copyright © 2009 Tohatsu Corporation. All rights reserved. No part of this manual may be reproduced or transmitted in any form or by any means without the express written permission of Tohatsu Corporation.

TOHATSU

TOHATSU CORPORATION
Address : 5-4,3-chome,Azusawa,Itabashi-ku,
TOKYO,174-0051 JAPAN
Phone : TOKYO (03)3966-3117
FAX : TOKYO (03)3966-0090
Website : www.tohatsu.co.jp

トーハツ船外機
パーツ　リスト

PARTS LIST

MFS 2B
2.5B
3.5B

本　　社 〒174-0051 東京都板橋区小豆沢3-5-4 03(3966)3116
マリン九州 〒816-0092 福岡市博多区東那珂2-10-55 092(411)8770
マリン関西 〒530-0043 大阪市北区天満1-8-27 06(6358)2971
マリン中部 〒440-0069 愛知県豊橋市御園町7-12 0532(54)5551
マリン関東 〒174-0051 東京都板橋区小豆沢3-5-4 03(3966)2222
マリン東北 〒981-1106 仙台市太白区柳生2-23-1 022(306)9131
マリン北海道 〒060-0031 札幌市中央区北一条東11丁目22-41 011(241)8301

002-21052-1
0910-NB3000