PARTS LIST

トーハツ船外機
パーツ　リスト

TOHATSU

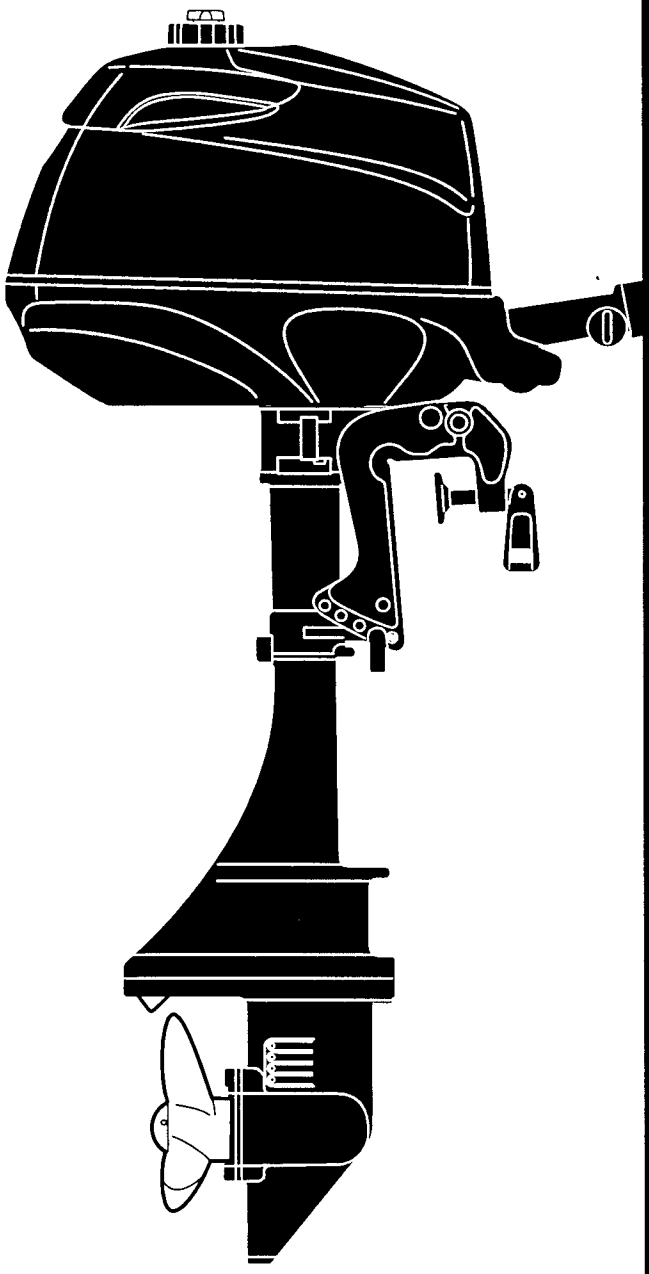

MFS 2
2.5
3.5

OB NO.002-21052-0
0604 MH 4,000

パーツリストのご使用について

1. このパーツリストは、トーハツ船外機を構成している部品を収録したものです。

2. 部品の新設、廃止または、変更が生じた場合は、インフォメーション等にてお知らせ致しますので、その都度、ご訂正ください。

3. アッセンブリまたは、キットでの販売部品は、その構成する部品の頭に（＊）印をつけて表わしています。

4. 本文中に記載されている記号は、次の様になっています。
   AR：必要に応じて選択　　Ass'y：アッセンブリ

5. オーダー上の注意
   塗装部品の注文に当っては、以下に従ってください。
   パーツナンバの 4 桁目が "B"・"Q" 記号のものは塗装されています。現在の塗装色はパワーヘッドがブラック(B)、ロワユニットがアクアマリンブルー(Q) です。

   例示-1：パワーヘッド部品
   3ABB01100-0
   ブラック

   例示-2：ロワユニット部品
   3ABQ61020-0
   アクアマリンブルー

6. 備考欄に"UNIQUE"もしくは"N. A. F. N."と記されている部品がありますが、特に関係ありません。

目　　次
CONTENTS

Fig. 1	シリンダ・クランクケース CYLINDER-CRANKCASE	1
Fig. 2	ピストン＆クランクシャフト PISTON & CRANKSHAFT	3
Fig. 3	キャブレタ CARBURETOR	5
Fig. 4	オイルパン OIL PAN	9
Fig. 5	カムシャフト＆バルブ CAMSHAFT & VALVE	11
Fig. 6	マグネト MAGNETO	13
Fig. 7	ティラハンドル＆スロットル TILLER HANDLE & THROTTLE	15
Fig. 8	リコイルスタータ RECOIL STARTER	17
Fig. 9	ドライブシャフトハウジング DRIVE SHAFT HOUSING	19
Fig. 10	ギヤケース（ドライブシャフト） GEAR CASE (DRIVE SHAFT)	21
Fig. 11	ギヤケース（プロペラシャフト） GEAR CASE (PROPELLER SHAFT)	23
Fig. 12	シフト SHIFT	25
Fig. 13	クランプブラケット＆スイベルブラケット CLAMP BRACKET & SWIVEL BRACKET	27
Fig. 14	フュエルタンク FUEL TANK	31
Fig. 15	カウル COWL	33
Fig. 16	オプショナルパーツ＆アクセサリー OPTIONAL PARTS & ACCESSORIES	35
Fig. 17	アッセンブリキット ASSEMBLY KIT	37

シリンダ＆シリンダヘッド

Fig. 1 CYLINDER & CYLINDER HERD

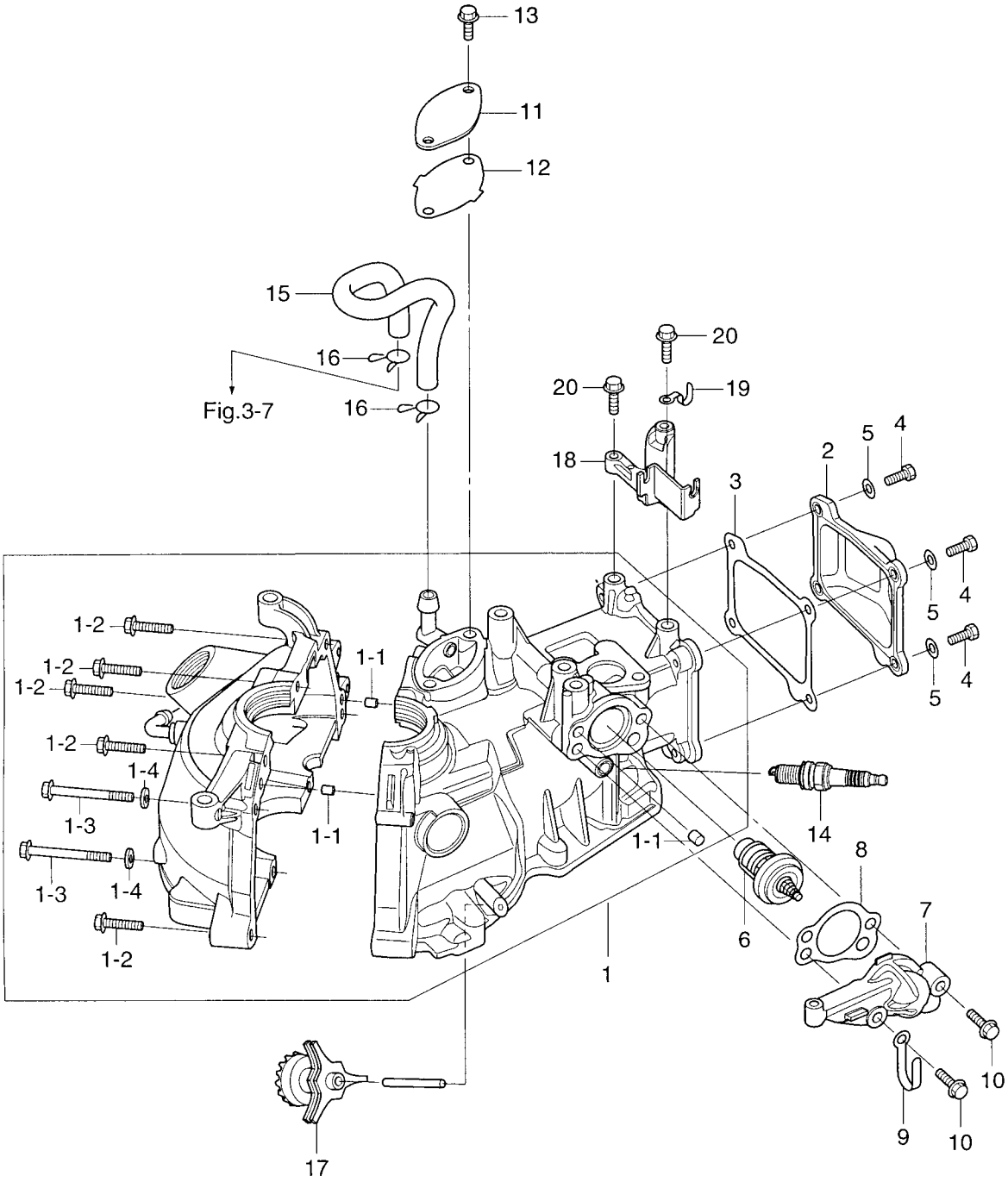

見出番号 Ref. No.	部品番号 Part No.	部　品　名 Description	個数 Q'ty F 3.5 A	F 2.5 A	F 2 A	備　考 Remarks
1-1	3ABB01100-0	ｼﾘﾝﾀﾞｰ･ｸﾗﾝｸｹｰｽ Cylinder-Crankcase	1	1	1	with Nipple
1-1-1	345-01111-0	ﾀﾞｳｴﾙﾋﾟﾝ、6-12 * Dowel Pin, 6-12	3	3	3	
1-1-2	910114-5635	ﾎﾞﾙﾄ * Bolt	6	6	6	
1-1-3	916119-0675	ﾎﾞﾙﾄ * Bolt	2	2	2	
1-1-4	940113-0600	ﾜｯｼｬ * Washer	2	2	2	
1-2	3ABB01021-0	ｼﾘﾝﾀﾞﾍｯﾄﾞｶﾊﾞｰ Cylinder Head Cover	1	1	1	
1-3	3AB-01024-0	ｼﾘﾝﾀﾞﾍｯﾄﾞｶﾊﾞｰｶﾞｽｹｯﾄ Cylinder Head Cover Gasket	1	1	1	
1-4	910121-0616	ﾎﾞﾙﾄ Bolt	4	4	4	or 910113-0616
1-5	3R0-66308-0	ﾜｯｼｬ、6-16-1.5 Washer, 6-16-1.5	4	4	4	or 3C8-66308-0
1-6	3H6-01030-0	ｻｰﾓｽﾀｯﾄ Thermostat	1	1	1	Mark 5B
1-7	3ABB01031-0	ｻｰﾓｽﾀｯﾄｷｬｯﾌﾟ Thermostat Cap	1	1	1	
1-8	3AB-01032-0	ｻｰﾓｽﾀｯﾄｷｬｯﾌﾟｶﾞｽｹｯﾄ Thermostat Cap Gasket	1	1	1	
1-9	398-06972-0	ｸﾗﾝﾌﾟ、6.5-67P Clamp, 6.5-67P	1	1	1	
1-10	910113-5630	ﾎﾞﾙﾄ Bolt	2	2	2	
1-11	3AB-07431-0	ﾌﾞﾘｰｻﾞﾁｬﾝﾊﾞｶﾊﾞｰ Breather Chamber Cover	1	1	1	
1-12	3AB-07432-0	ﾌﾞﾘｰｻﾞﾁｬﾝﾊﾞｶﾊﾞｰｶﾞｽｹｯﾄ Breather Chamber Cover Gasket	1	1	1	
1-13	910113-5616	ﾎﾞﾙﾄ Bolt	2	2	2	
1-14	9701-1-1103	ｽﾊﾟｰｸﾌﾟﾗｸﾞ Spark Plug	1	1	1	NGK: DCPR6E
1-15	3AB-07435-0	ﾌﾞﾘｰｻﾞﾎｰｽ Breather Hose	1	1	1	
1-16	3C7-02215-0	ｸﾘｯﾌﾟ、φ12 Clip, φ12	2	2	2	
1-17	3AB-07640-0	ｽﾘﾝｶﾞ Slinger	1	1	1	
1-18	3AB-63508-0	ｽﾛｯﾄﾙﾜｲﾔﾌﾞﾗｹｯﾄ Throttle Cable Bracket	1	1	1	
1-19	398-06972-0	ｸﾗﾝﾌﾟ、6.5-67P Clamp, 6.5-67P	1	1	1	
1-20	910113-5625	ﾎﾞﾙﾄ Bolt	2	2	2	

ピストン＆クランクシャフト
Fig. 2 PISTON & CRANKSHAFT

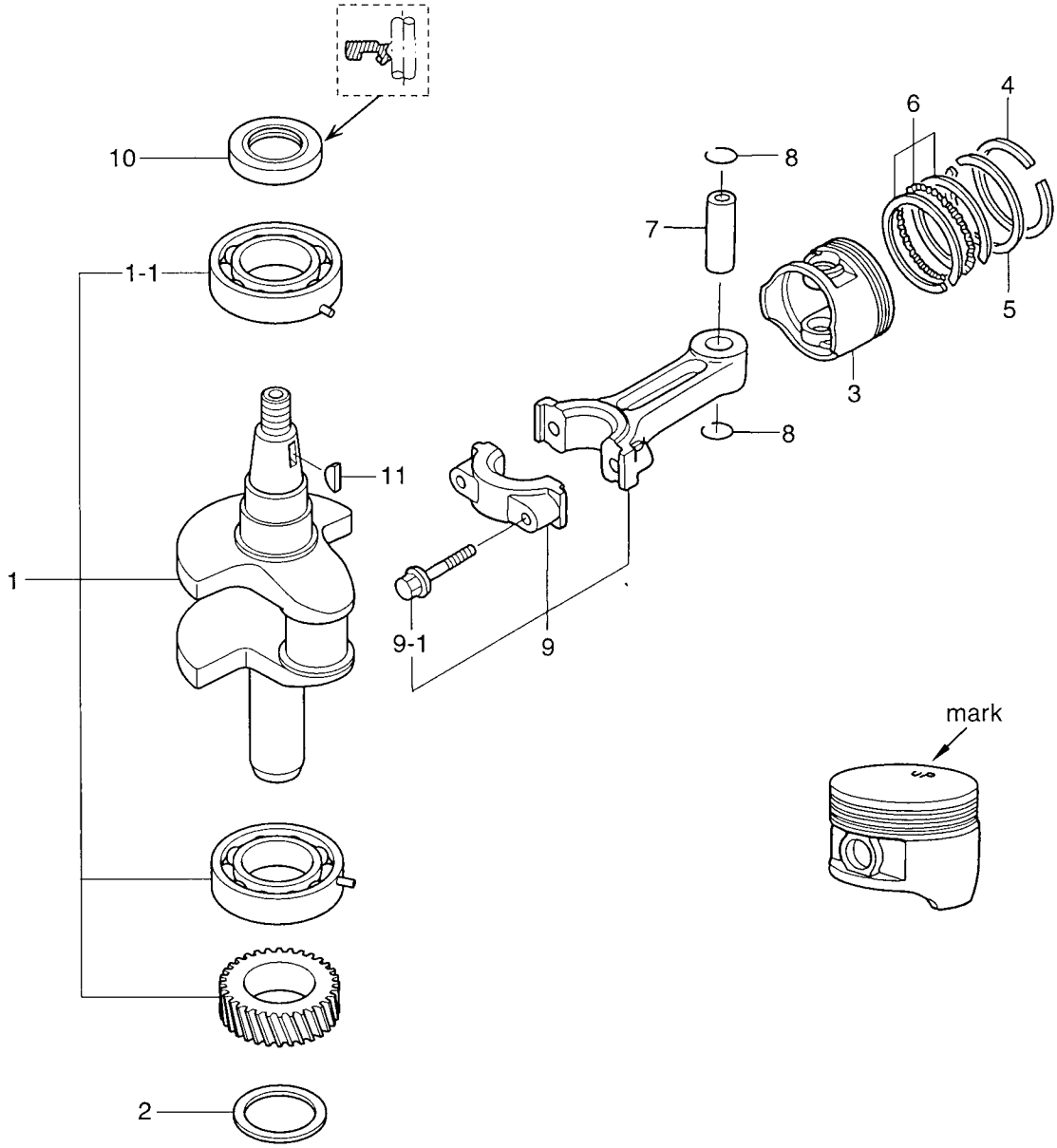

見出番号 Ref. No.	部品番号 Part No.	部　品　名 Description	個数 Q'ty F 3.5 A	F 2.5 A	F 2 A	備　考 Remarks
2-1	3AB-00070-0	ｸﾗﾝｸｼｬﾌﾄｱｯｼ Crankshaft Ass'y	1	1	1	with Gear
2-1-1	9603-3-6204	ﾎﾞｰﾙﾍﾞｱﾘﾝｸﾞ、6204 * Ball Bearing, 6204	1	1	1	
2-2	3AB-00115-0	ｽﾗｽﾄﾌﾟﾚｰﾄ、20.2-32-1 Thrust Plate, 20.2-32-1	1	1	1	
2-3	3AB-00001-0	ﾋﾟｽﾄﾝ Piston	1	1	1	
2-4	3V1-00011-0	ﾋﾟｽﾄﾝﾘﾝｸﾞ ﾄｯﾌﾟ Piston Ring Top	1	1	1	
2-5	3V1-00012-0	ﾋﾟｽﾄﾝﾘﾝｸﾞ 2nd Piston Ring 2nd	1	1	1	
2-6	3V1-00013-0	ﾋﾟｽﾄﾝﾘﾝｸﾞ ｵｲﾙ Piston Ring Oil	1	1	1	
2-7	332-00021-0	ﾋﾟｽﾄﾝﾋﾟﾝ Piton Pin	1	1	1	
2-8	350-00024-1	ﾋﾟｽﾄﾝﾋﾟﾝｸﾘｯﾌﾟ Piton Pin Clip	2	2	2	
2-9	3AB-00040-0	ｺﾝﾛｯﾄﾞｱｯｼ Connecting Rod Ass'y	1	1	1	
2-9-1	3AB-00059-0	ｺﾝﾛｯﾄﾞﾎﾞﾙﾄ * Connecting Rod Bolt	2	2	2	
2-10	3AB-00121-0	ｵｲﾙｼｰﾙ、20-35-7 Oil Seal, 20-35-7	1	1	1	
2-11	309-00131-0	ﾏｸﾞﾈﾄｷｰ Magneto Key	1	1	1	

キャブレタ
Fig. 3 CARBURETOR

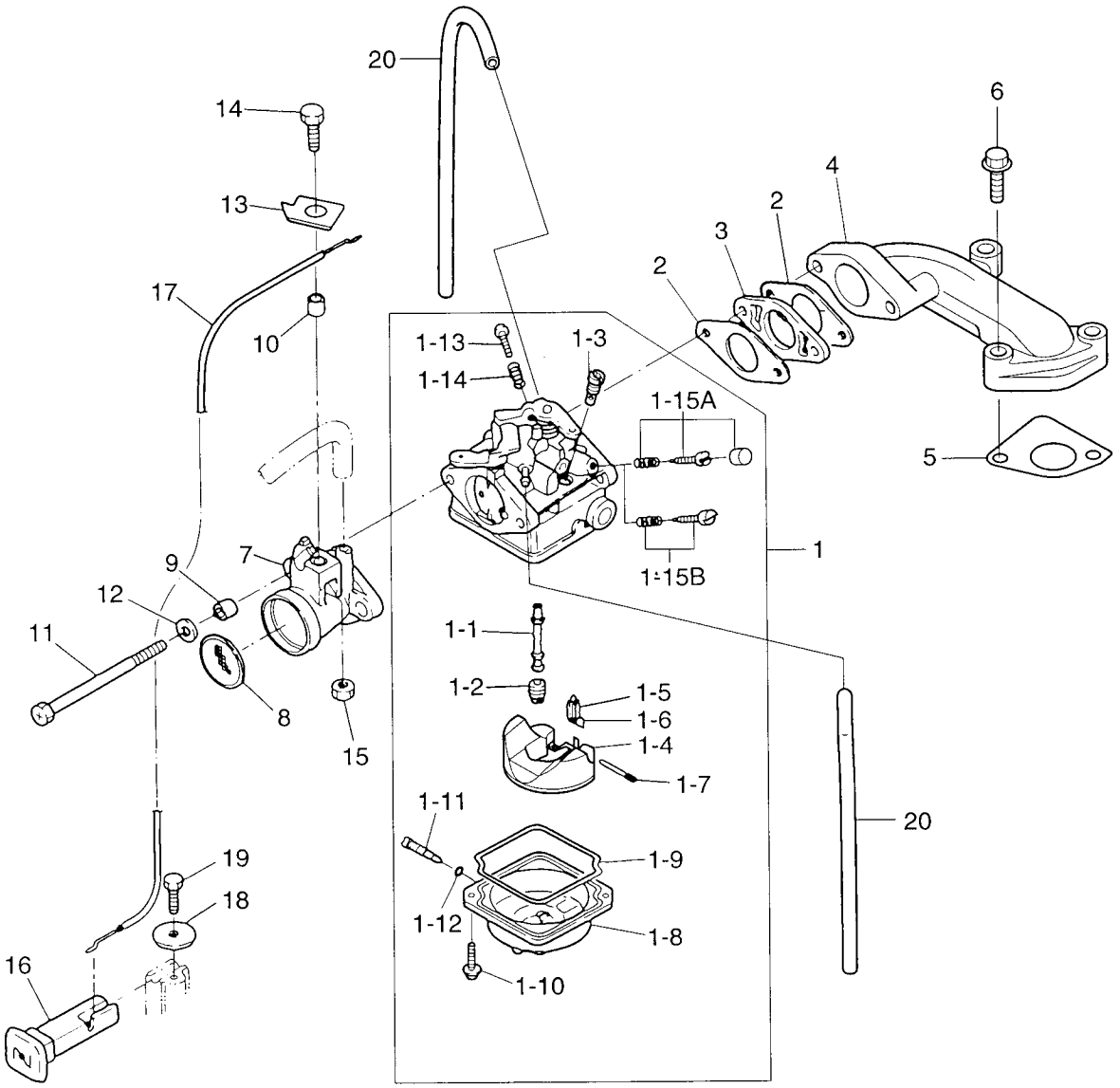

見出番号 Ref. No.	部品番号 Part No.	部　品　名 Description	個数 Q'ty F 3.5 A	F 2.5 A	F 2 A	備　考 Remarks
3-1	3BR-03200-0	ｷｬﾌﾞﾚﾀ Carburetor	1	-	-	
	3EA-03200-0	ｷｬﾌﾞﾚﾀ (EU) Carburetor (for EU)	(1)	-	-	for EU
	3AB-03200-0	ｷｬﾌﾞﾚﾀ Carburetor	-	1	-	
	3DV-03200-0	ｷｬﾌﾞﾚﾀ (EU) Carburetor (for EU)	-	(1)	-	for EU
	3BV-03200-0	ｷｬﾌﾞﾚﾀ Carburetor	-	-	1	
3-1-1	3BR-03252-0	ﾒｲﾝﾉｽﾞﾙ * Main Nozzle	1	-	-	
	3AB-03252-0	ﾒｲﾝﾉｽﾞﾙ * Main Nozzle	-	1	-	
	3BV-03252-0	ﾒｲﾝﾉｽﾞﾙ * Main Nozzle	-	-	1	
3-1-2	3AU-04468-0	ﾒｲﾝｼﾞｪｯﾄ # 68 * Main Jet # 68	1	-	-	
	3AB-04462-0	ﾒｲﾝｼﾞｪｯﾄ # 62 * Main Jet # 62	-	1	-	
	3DJ-04458-0	ﾒｲﾝｼﾞｪｯﾄ # 58 * Main Jet # 58	-	-	1	
3-1-3	3R1-03254-0	ｽﾛｰｼﾞｪｯﾄ # 38 * Slow Jet # 38	1	1	1	
3-1-4	3AB-03231-0	ﾌﾛｰﾄ * Float	1	1	1	
3-1-5	3H6-03240-0	ﾌﾛｰﾄﾊﾞﾙﾌﾞ * Float Valve	1	1	1	
3-1-6	3H6-03244-0	ｸﾘｯﾌﾟ * Clip	1	1	1	
3-1-7	3H6-03232-0	ﾌﾛｰﾄｱｰﾑﾋﾟﾝ * Float Arm Pin	1	1	1	
3-1-8	3H6-03221-0	ﾌﾛｰﾄﾁｬﾝﾊﾞ * Float Chamber	1	1	1	
3-1-9	3H6-03222-0	ﾌﾛｰﾄﾁｬﾝﾊﾞ O ﾘﾝｸﾞ * Float Chamber O-Ring	1	1	1	
3-1-10	922503-6412	ｽｸﾘｭ * Screw	2	2	2	
3-1-11	3H6-03292-0	ﾄﾞﾚﾝｽｸﾘｭ * Drain Screw	1	1	1	
3-1-12	3H6-03293-0	ﾄﾞﾚﾝｽｸﾘｭ O ﾘﾝｸﾞ * Drain Screw O-Ring	1	1	1	
3-1-13	3H6-03265-0	ｽﾄｯﾌﾟｽｸﾘｭ * Stop Screw	1	1	1	
3-1-14	3H6-03267-0	ｽﾄｯﾌﾟｽｸﾘｭｽﾌﾟﾘﾝｸﾞ * Stop Screw Spring	1	1	1	
3-1-15A	3AS-03266-0	ﾊﾟｲﾛｯﾄｽｸﾘｭｾｯﾄ * Pilot Screw Set	1	1	1	
3-1-15B	3CH-03266-0	ﾊﾟｲﾛｯﾄｽｸﾘｭｾｯﾄ (EU) * Pilot Screw Set (for EU)	(1)	(1)	-	for EU
3-2	3H6-02011-0	ｷｬﾌﾞﾚﾀｶﾞｽｹｯﾄ Carburetor Gasket	2	2	2	
3-3	3H6-03952-1	ｲﾝｼｭﾚｰﾀ Insulator	1	1	1	
3-4	3ABB02091-0	ｲﾝﾃｰｸﾏﾆﾎｰﾙﾄﾞ Intake Manifold	1	1	1	
3-5	3AB-02104-0	ｲﾝﾃｰｸﾏﾆﾎｰﾙﾄﾞｶﾞｽｹｯﾄ Intake Manifold Gasket	1	1	1	
3-6	910114-5630	ﾎﾞﾙﾄ Bolt	2	2	2	

キャブレタ
Fig. 3 CARBURETOR

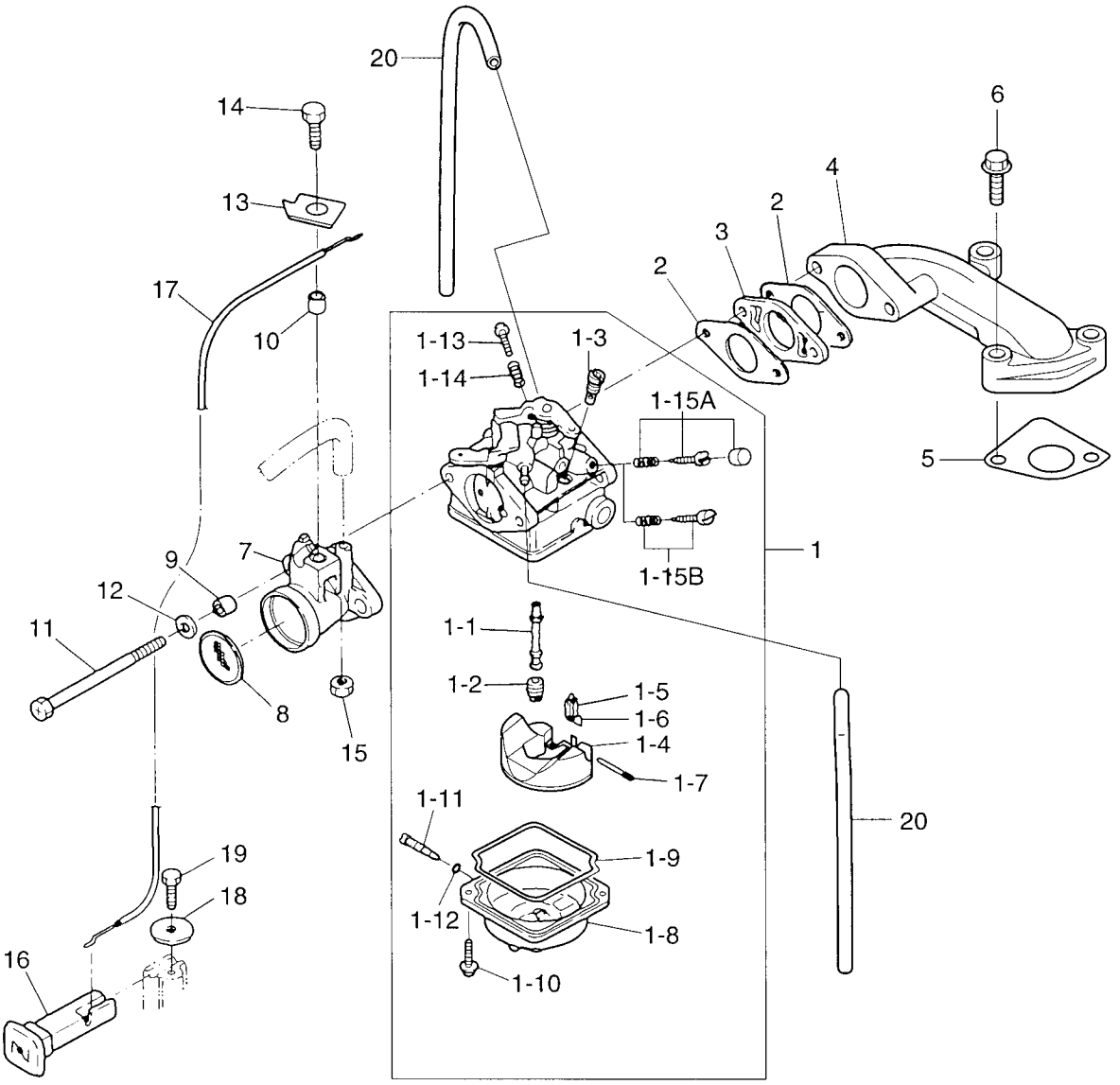

見出番号 Ref. No.	部品番号 Part No.	部　品　名 Description	個数 Q'ty F 3.5 A	F 2.5 A	F 2 A	備　考 Remarks
3-7	3H6-02411-0	ｲﾝﾃｰｸｻｲﾚﾝｻ Intake Silencer	1	1	1	
3-8	3H6-02603-0	ﾌﾚｰﾑｱﾚｽﾀｰ Flame Arrester	1	1	1	
3-9	3A0-76079-0	ｶﾗｰ、6.2-9-7.5 Collar, 6.2-9-7.5	2	2	2	
3-10	3H6-76079-0	ｶﾗｰ、6.2-9-7 Collar, 6.2-9-7	1	1	1	
3-11	916481-0685	ﾎﾞﾙﾄ Bolt	2	2	2	
3-12	940113-0600	ﾜｯｼｬ Washer	2	2	2	or 940103-0600
3-13	3H6-63505-0	ｹｰﾌﾞﾙﾎﾙﾀﾞ Cable Holder	1	1	1	
3-14	910113-0616	ﾎﾞﾙﾄ Bolt	1	1	1	or 910103-0616
3-15	930113-0600	ﾅｯﾄ Nut	1	1	1	or 910103-0600
3-16	3H6-67151-0	ﾁｮｰｸﾛｯﾄﾞ Choke Rod	1	1	1	
3-17	3AB-67197-0	ﾁｮｰｸﾘﾝｸﾜｲﾔ Choke Link Cable	1	1	1	
3-18	346-67115-0	ﾜｯｼｬ、6.5-21-1 Washer, 6.5-21-1	1	1	1	
3-19	910113-0612	ﾎﾞﾙﾄ Bolt	1	1	1	or 910103-0612
3-20	98AB-3-0230	ｺﾞﾑﾎｰｽ Rubber Hose	2	2	2	

オイルパン

Fig. 4 OIL PAN

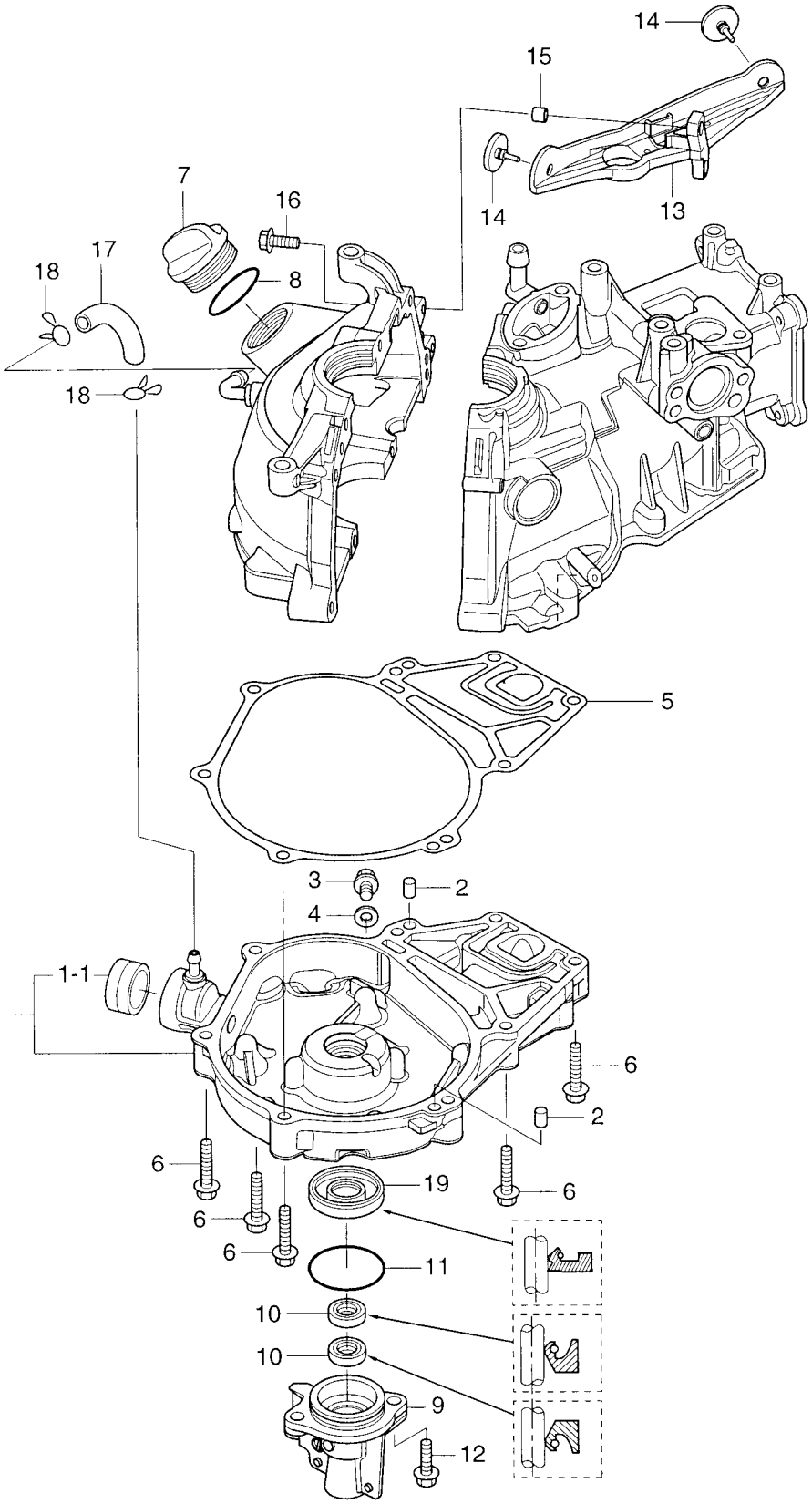

見出番号 Ref. No.	部品番号 Part No.	部　品　名 Description	個数 Q'ty F 3.5 A	F 2.5 A	F 2 A	備　考 Remarks
4-1	3ABB07400-0	ｵｲﾙﾊﾟﾝｱｯｼ Oil Pan Ass'y	1	1	1	
4-1-1	3AB-07421-0	＊ ｵｲﾙﾚﾍﾞﾙｹﾞｰｼﾞ Oil Level Gauge	1	1	1	
4-2	345-01111-0	ﾀﾞｳｴﾙﾋﾟﾝ、6-12 Dowel Pin, 6-12	2	2	2	
4-3	3H6-07405-0	ﾄﾞﾚﾝﾎﾞﾙﾄ Drain Bolt	1	1	1	
4-4	3H6-07406-0	ﾜｯｼｬ、10.2-19-1 Washer, 10.2-19-1	1	1	1	
4-5	3AB-07402-0	ｵｲﾙﾊﾟﾝｶﾞｽｹｯﾄ Oil Pan Gasket	1	1	1	
4-6	910114-5635	ﾎﾞﾙﾄ Bolt	8	8	8	
4-7	3R0-71015-0	ｴﾝｼﾞﾝｵｲﾙﾌｨﾗｰｷｬｯﾌﾟ Engine Oil Filler Cap	1	1	1	
4-8	3R0-07422-0	O ﾘﾝｸﾞ、3.1-24.4 O-Ring, 3.1-24.4	1	1	1	
4-9	3AB-01210-0	ｸﾗﾝｸｹｰｽﾍｯﾄﾞ Crank Case Head	1	1	1	
4-10	3AB-01215-0	ｵｲﾙｼｰﾙ、10.1-20-7 Oil Seal, 10.1-20-7	2	2	2	
4-11	3V1-02012-0	O ﾘﾝｸﾞ 2.4-35.2 O-Ring, 2.4-35.2	1	1	1	
4-12	910113-5620	ﾎﾞﾙﾄ Bolt	2	2	2	
4-13	3AB-05101-0	ｽﾄｯﾊﾟﾌﾞﾗｹｯﾄ Stopper Bracket	1	1	1	
4-14	1E0-09104-0	ﾗﾊﾞｰﾀﾞﾝﾊﾟ Rubber Damper	2	2	2	
4-15	3A0-76079-0	ｶﾗｰ、6.2-9-7.4 Collar, 6.2-9-7.4	2	2	2	
4-16	910113-5620	ﾎﾞﾙﾄ Bolt	2	2	2	
4-17	98AB-5-0090	ｺﾞﾑﾎｰｽ Rubber Hose	1	1	1	
4-18	338-02215-0	ｸﾘｯﾌﾟ、φ10 Clip, φ10	2	2	2	
4-19	3AB-00121-0	ｵｲﾙｼｰﾙ、20-35-7 Oil Seal, 20-35-7	1	1	1	

カムシャフト＆バルブ
Fig. 5 CAMSHAFT & VALVE

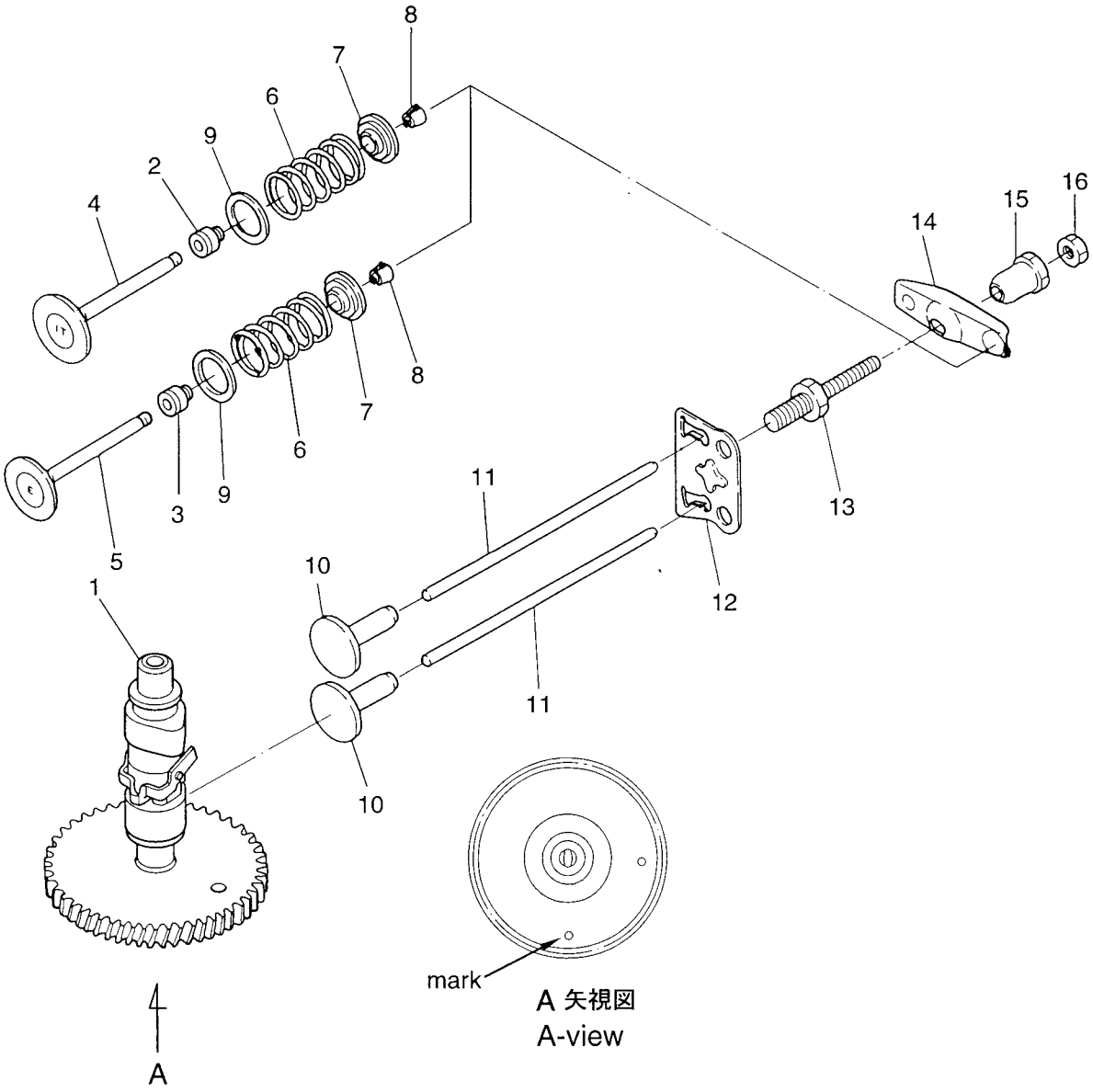

見出番号 Ref. No.	部品番号 Part No.	部　品　名 Description	個数 Q'ty F 3.5 A	F 2.5 A	F 2 A	備　考 Remarks
5-1	3BM-07010-0	ｶﾑｼｬﾌﾄｱｯｼ Camshaft Ass'y	1	1	1	
5-2	3R3-07204-0	ｲﾝﾃｰｸﾊﾞﾙﾌﾞｽﾃﾑｼｰﾙ Intake Valve Stem Seal	1	1	1	Black
5-3	3R3-07206-0	ｴｷｿﾞｰｽﾄﾊﾞﾙﾌﾞｽﾃﾑｼｰﾙ Exhaust Valve Stem Seal	1	1	1	Green
5-4	3AB-07201-0	ｲﾝﾃｰｸﾊﾞﾙﾌﾞ Intake Valve	1	1	1	
5-5	3V1-07202-0	ｴｷｿﾞｰｽﾄﾊﾞﾙﾌﾞ Exhaust Valve	1	1	1	
5-6	3H6-07203-1	ﾊﾞﾙﾌﾞｽﾌﾟﾘﾝｸﾞ Valve Spring	2	2	2	L=35
5-7	3V1-07221-0	ﾘﾃｰﾅ Retainer	2	2	2	
5-8	3H6-07223-0	ｺｯﾀｰ Cotter	4	4	4	
5-9	3H6-07205-0	ﾊﾞﾙﾌﾞｽﾌﾟﾘﾝｸﾞｼｰﾄ Valve Spring Seat	2	2	2	
5-10	3AB-07231-0	ﾘﾌﾀ Lifter	2	2	2	
5-11	3H6-07232-0	ﾌﾟｯｼｭﾛｯﾄﾞ Push Rod	2	2	2	
5-12	3AB-07233-0	ﾌﾟｯｼｭﾛｯﾄﾞﾌﾟﾚｰﾄ Push Rod Plate	1	1	1	
5-13	3H6-07234-0	ﾋﾟﾎﾞｯﾄﾎﾞﾙﾄ Pivot Bolt	2	2	2	
5-14	3AB-07235-0	ﾛｯｶｰｱｰﾑ Rocker Arm	2	2	2	
5-15	3H6-07236-0	ﾛｯｶｰｱｰﾑﾋﾟﾎﾞｯﾄ Rocker Arm Pivot	2	2	2	
5-16	3H6-07237-0	ｱｼﾞｬｽﾄﾅｯﾄ Adjusting Nut	2	2	2	

マグネト
Fig. 6 MAGNETO

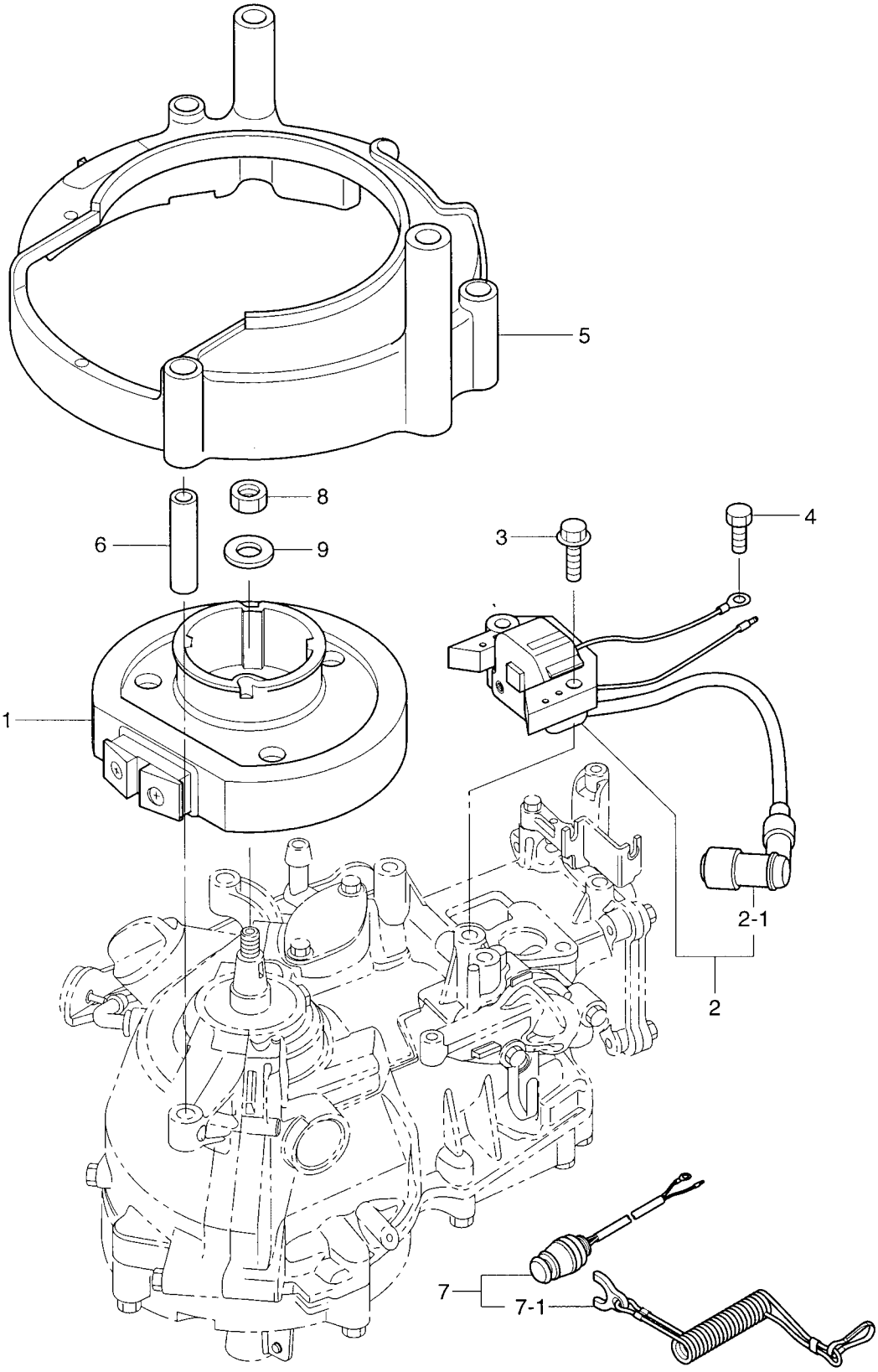

見出番号 Ref. No.	部品番号 Part No.	部　品　名 Description	個数 Q'ty F 3.5 A	F 2.5 A	F 2 A	備　考 Remarks
6-1	3AB-06001-0	ﾌﾗｲﾎｲﾙｶｯﾌﾟ Flywheel Cup	1	1	1	
6-2	3AB-06040-0	ｲｸﾞﾅｲﾀ Igniter	1	1	1	
6-2-1	3H6-06999-0	ﾌﾟﾗｸﾞｷｬｯﾌﾟ (ﾚｼﾞｽﾀﾝｽ) * Plug Cap (with Resistance)	1	1	1	
6-3	910103-5620	ﾎﾞﾙﾄ Bolt	2	2	2	
6-4	910103-5612	ﾎﾞﾙﾄ Bolt	1	1	1	
6-5	3AB-06300-0	ﾌﾗｲﾎｲﾙｶﾊﾞｰ Flywheel Cover	1	1	1	
6-6	3AB-06303-0	ｶﾗｰ、6.2-9-35 Collar, 6.2-9-35	3	3	3	
6-7	3D5-06870-0	ｽﾄｯﾌﾟｽｲｯﾁ Stop Switch	1	1	1	
6-7-1	353-06821-0	ｽﾄｯﾌﾟｽｲｯﾁﾛｯｸ (ﾛｰﾌﾟ付) * Stop Switch Lanyard	1	1	1	
6-8	309-00132-0	ﾏｸﾞﾈﾄﾅｯﾄ (10P-1.25) Magneto Nut (10P-1.25)	1	1	1	
6-9	940121-1000	ﾜｯｼｬ Washer	1	1	1	

ティラハンドル＆スロットル
Fig. 7 TILLER HANDLE & THROTTLE

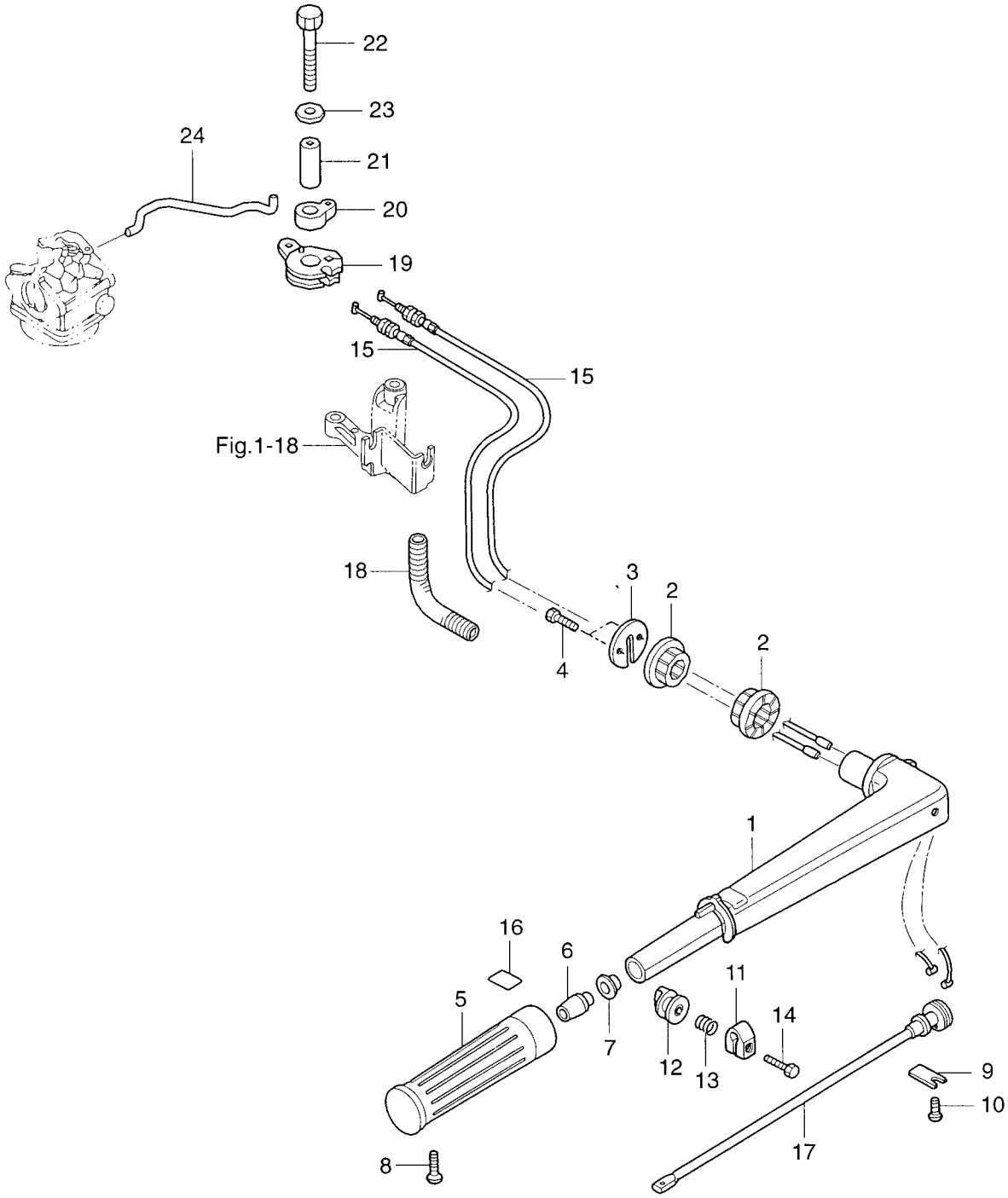

見出番号 Ref. No.	部品番号 Part No.	部　品　名 Description	個数 Q'ty F 3.5 A	F 2.5 A	F 2 A	備　考 Remarks
7-1	3V1Q63011-0	ﾃｨﾗﾊﾝﾄﾞﾙ Tiller Handle	1	1	1	
7-2	369-63102-0	ﾃｨﾗﾊﾝﾄﾞﾙﾌﾞｯｼﾝｸﾞ Tiller Handle Bushing	2	2	2	
7-3	3V1-63107-0	ｶﾊﾞｰ Cover	1	1	1	
7-4	910113-0616	ﾎﾞﾙﾄ Bolt	2	2	2	
7-5	3R3-63012-0	ｸﾞﾘｯﾌﾟ Grip	1	1	1	
7-6	3H6-63048-0	ｽﾛｯﾄﾙｼｬﾌﾄﾀﾞﾝﾊﾟ Throttle Shaft Damper	1	1	1	
7-7	3H6-63510-0	ﾌﾞｯｼﾝｸﾞ、14-15.8-7 Bushing, 14-15.8-7	1	1	1	
7-8	920813-0518	ｽｸﾘｭ Screw	1	1	1	
7-9	3B2-63063-0	ｽﾛｯﾄﾙｼｬﾌﾄｻﾎﾟｰﾀ Throttle Shaft Supporter	1	1	1	
7-10	921513-0612	ｽｸﾘｭ Screw	1	1	1	or 921503-0612
7-11	3V1-63035-0	ﾌﾘｸｼｮﾝﾋﾟｰｽ Friction Piece	1	1	1	
7-12	3V1-63077-0	ｱｼﾞｬｽﾄﾅｯﾄ Adjusting Nut	1	1	1	
7-13	3V1-63036-0	ｽﾌﾟﾘﾝｸﾞ Spring	1	1	1	
7-14	910113-0625	ﾎﾞﾙﾄ Bolt	1	1	1	
7-15	3V1-63600-0	ｽﾛｯﾄﾙﾜｲﾔ Throttle Cable	2	2	2	
7-16	3V9-72019-0	ｽﾛｯﾄﾙﾃﾞｶﾙ Throttle Decal	1	1	1	
7-17	3V1-63041-0	ｽﾛｯﾄﾙｼｬﾌﾄ Throttle Shaft	1	1	1	
7-18	3H9-70313-0	ｽﾛｯﾄﾙﾜｲﾔﾌﾟﾛﾃｸﾀ Throttle Cable Protector	1	1	1	
7-19	3H6-63611-0	ｽﾛｯﾄﾙﾄﾞﾗﾑ Throttle Drum	1	1	1	
7-20	3H6-63612-0	ｽﾛｯﾄﾙｵｰﾌﾟﾅ Throttle Opener	1	1	1	
7-21	3H6-63618-0	ｶﾗｰ、6.5-10.5-22.6 Collar, 6.5-10.5-22.6	1	1	1	
7-22	916113-0635	ﾎﾞﾙﾄ Bolt	1	1	1	
7-23	3R0-66308-0	ﾜｯｼｬ、6-16-1.5 Washer, 6-16-1.5	1	1	1	or 3C8-66308-0
7-24	3AB-63617-0	ｽﾛｯﾄﾙﾛｯﾄﾞ Throttle Rod	1	1	1	

リコイルスタータ
Fig. 8 RECOIL STARTER

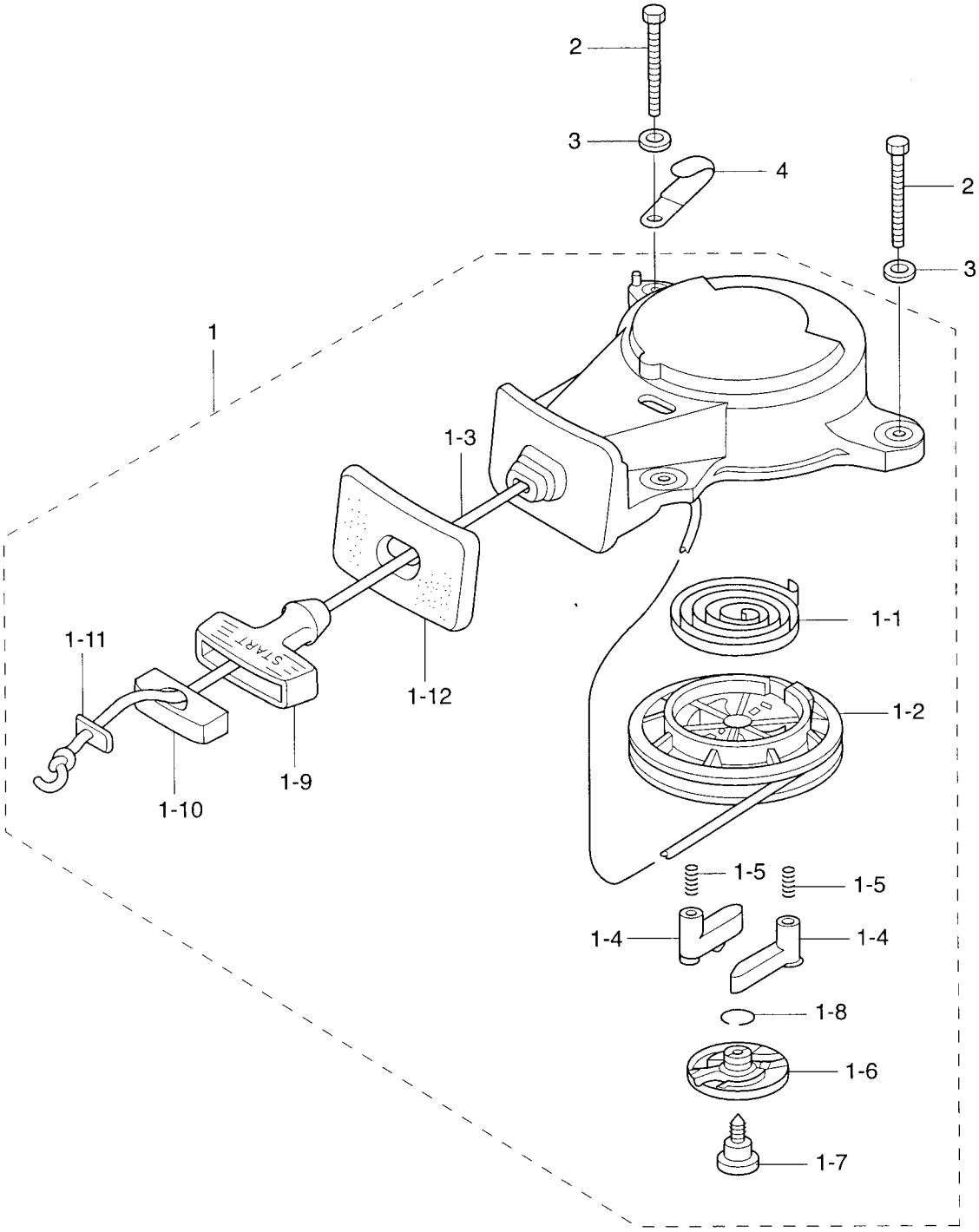

見出番号 Ref. No.	部品番号 Part No.	部　品　名 Description	個数 Q'ty F 3.5 A	F 2.5 A	F 2 A	備　考 Remarks
8-1	3AB-05090-0	ﾘｺｲﾙｽﾀｰﾀ Recoil Starter	1	1	1	
8-1-1	3AB-05004-0	ｽﾀｰﾀｽﾌﾟﾘﾝｸﾞ * Starter Spring	1	1	1	
8-1-2	3AB-05104-0	ﾘｰﾙ * Reel	1	1	1	
8-1-3	3AB-05013-0	ｽﾀｰﾀﾛｰﾌﾟ * Starter Rope	1	1	1	φ3.5-1200
8-1-4	3AB-05003-0	ﾗﾁｪｯﾄ * Ratchet	2	2	2	
8-1-5	3AB-05012-0	ﾘﾀｰﾝｽﾌﾟﾘﾝｸﾞ * Return Spring	2	2	2	
8-1-6	3AB-05006-0	ﾌﾘｸｼｮﾝﾌﾟﾚｰﾄ * Friction Plate	1	1	1	
8-1-7	3AB-05138-0	ｽﾀｰﾀｼｬﾌﾄｽｸﾘｭ * Starter Shaft Screw	1	1	1	
8-1-8	3AB-05007-0	ﾌﾘｸｼｮﾝｽﾌﾟﾘﾝｸﾞ * Friction Spring	1	1	1	
8-1-9	3AB-05019-0	ｽﾀｰﾀﾊﾝﾄﾞﾙ * Starter Handle	1	1	1	
8-1-10	3AB-05131-0	ﾛｰﾌﾟｱﾝｶ * Rope Anchor	1	1	1	
8-1-11	3AB-05134-0	ﾛｰﾌﾟｱﾝｶﾌﾟﾚｰﾄ * Rope Anchor Plate	1	1	1	
8-1-12	3AA-67503-0	ｽﾀｰﾀｼｰﾙ * Starter Seal	1	1	1	
8-2	910103-0660	ﾎﾞﾙﾄ Bolt	3	3	3	
8-3	3R0-66308-0	ﾜｯｼｬ、6-16-1.5 Washer, 6-16-1.5	3	3	3	or 3C8-66308-0
8-4	398-06972-0	ｸﾗﾝﾌﾟ、6.5-67P Clamp, 6.5-67P	1	1	1	

ドライブシャフトハウジング、ギヤケース

Fig. 9 DRIVE SHAFT HOUSING GEAR CASE

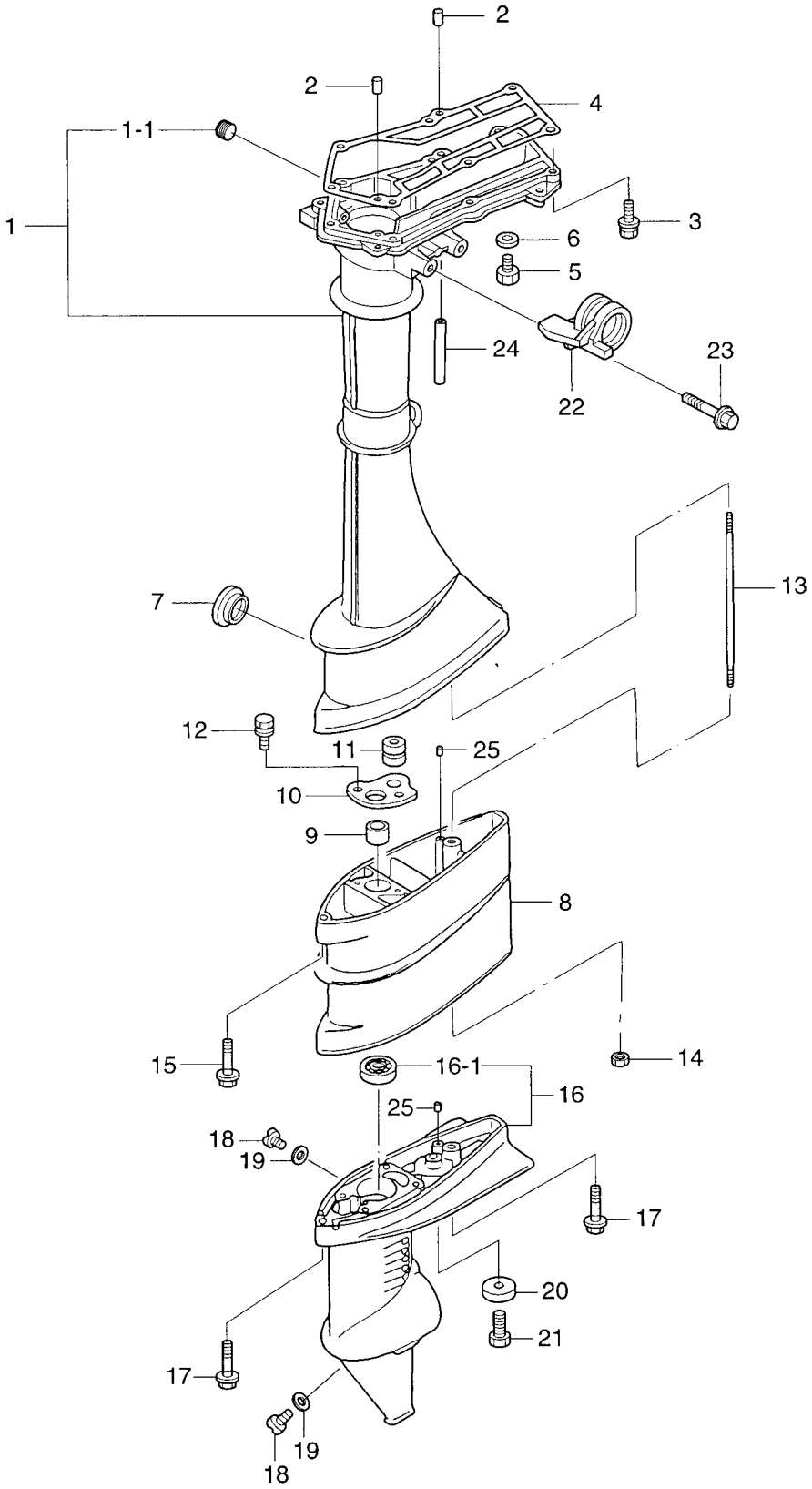

見出番号 Ref. No.	部品番号 Part No.	部　品　名 Description	個数 Q'ty F 3.5 A	F 2.5 A	F 2 A	備　考 Remarks
9-1	3ABQ61020-0	ﾄﾞﾗｲﾌﾞｼｬﾌﾄﾊｳｼﾞﾝｸﾞ S Drive Shaft Housing "S"	1	1	1	
9-1-1	3H6-07257-0	ｴｷｿﾞｰｽﾄﾌﾟﾗｸﾞ * Exhaust Plug	1	1	1	
9-2	345-01111-0	ﾀﾞｳｴﾙﾋﾟﾝ、6-12 Dowel Pin, 6-12	2	2	2	
9-3	910113-5630	ﾎﾞﾙﾄ Bolt	7	7	7	
9-4	3AB-61012-0	ﾄﾞﾗｲﾌﾞｼｬﾌﾄﾊｳｼﾞﾝｸﾞｶﾞｽｹｯﾄ Drive Shaft Housing Gasket	1	1	1	
9-5	910613-0808	ｳｫｰﾀﾌﾟﾗｸﾞ Water Plug	1	1	1	
9-6	332-60006-0	ｶﾞｽｹｯﾄ、8.1-15-1 Gasket, 8.1-15-1	1	1	1	
9-7	369-61016-0	ｸﾞﾛﾒｯﾄ、29-3 Grommet, 29-3	1	1	1	
9-8	3ABQ61100-0	ｴｸｽﾃﾝｼｮﾝﾊｳｼﾞﾝｸﾞ L Extension Housing " L"	1	1	1	for Transom "L"
9-9	3AB-60003-0	ﾄﾞﾗｲﾌﾞｼｬﾌﾄﾌﾞｯｼﾝｸﾞ Drive Shaft Bushing	1	1	1	
9-10	3AB-64332-0	ﾄﾞﾗｲﾌﾞｼｬﾌﾄﾌﾞｯｼﾝｸﾞｽﾄｯﾊﾟ Drive Shaft Bushing Stopper	1	1	1	
9-11	172-36008-0	ｸﾞﾛﾒｯﾄ、13-2 Grommet, 23-2	1	1	1	
9-12	910113-5612	ﾎﾞﾙﾄ Bolt	2	2	2	
9-13	3F0-61101-1	ｽﾀｯﾄﾞﾎﾞﾙﾄ、6-171 Stud Bolt, 6-171	1	1	1	
9-14	930113-0600	ﾅｯﾄ Nut	1	1	1	
9-15	3AB-60001-0	ﾎﾞﾙﾄ、6-30 ﾌﾟﾚｺｰﾄ Bolt, 6-30 Precoated	1	1	1	
9-16	3BMQ60000-0	ｷﾞﾔｹｰｽ Gear Case	1	1	1	
9-16-1	3AB-60213-0	ﾎﾞｰﾙﾍﾞｱﾘﾝｸﾞ、6000 * Ball Bearing, 6000	1	1	1	
9-17	3AB-60001-0	ﾎﾞﾙﾄ、6-30 ﾌﾟﾚｺｰﾄ Bolt, 6-30 Precoated	2	2	2	
9-18	332-60005-2	ｵｲﾙﾌﾟﾗｸﾞ Oil Plug	2	2	2	
9-19	332-60006-0	ｶﾞｽｹｯﾄ、8.1-15-1 Gasket, 8.1-15-1	2	2	2	
9-20	338-60218-2	ｱﾉｰﾄﾞ Anode	1	1	1	
9-21	910103-0616	ﾎﾞﾙﾄ Bolt	1	1	1	
9-22	3ABQ62001-0	ｽﾃｱﾘﾝｸﾞﾌﾞﾗｹｯﾄ Steering Bracket	1	1	1	
9-23	910113-5835	ﾎﾞﾙﾄ Bolt	2	2	2	
9-24	98AB-3-0050	ｺﾞﾑﾎｰｽ Rubber Hose	1	1	1	
9-25	3AB-01111-0	ﾀﾞｳｴﾙﾋﾟﾝ、6-12 Dowel Pin, 6-12	2	2	2	

ギヤケース（ドライブシャフト）

Fig. 10 GEAR CASE (DRIVE SHAFT)

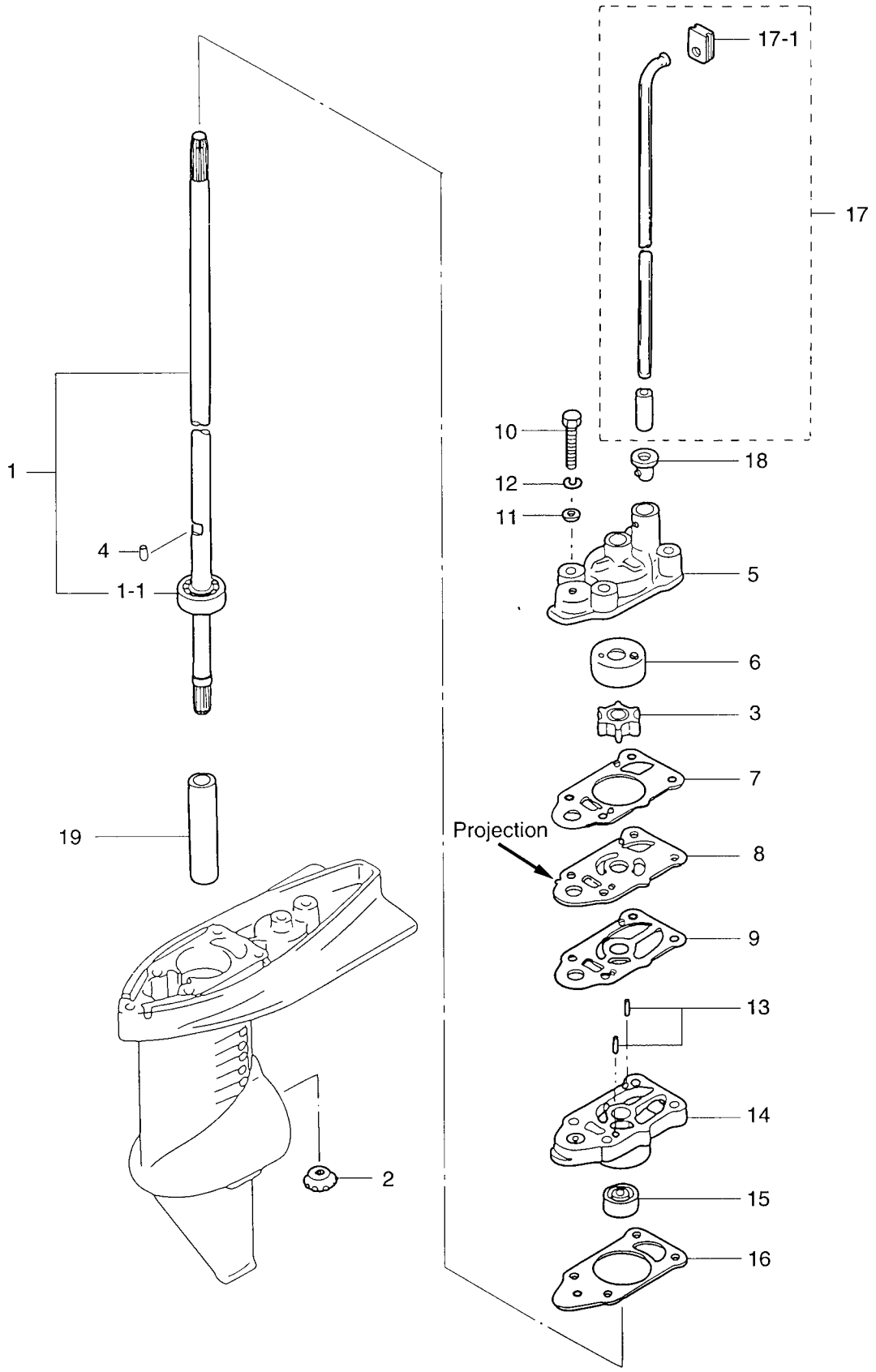

見出番号 Ref. No.	部品番号 Part No.	部　品　名 Description	個数 Q'ty F 3.5 A	F 2.5 A	F 2 A	備　考 Remarks
10-1	3AB-64306-0	ﾄﾞﾗｲﾌﾞｼｬﾌﾄ S Drive Shaft "S"	1	1	1	for Transom "S"
	3AB-64307-0	ﾄﾞﾗｲﾌﾞｼｬﾌﾄ L Drive Shaft "L"	1	1	1	for Transom "L"
10-1-1	3AB-60213-0	ﾎﾞｰﾙﾍﾞｱﾘﾝｸﾞ、6000 * Ball Bearing, 6000	1	1	1	
10-2	369-64020-2	ﾍﾞﾍﾞﾙｷﾞﾔ B Bevel Gear "B"	1	1	1	
10-3	369-65021-1	ｳｫｰﾀﾎﾟﾝﾌﾟｲﾝﾍﾟﾗ Water Pump Impeller	1	1	1	
10-4	369-65022-0	ｳｫｰﾀﾎﾟﾝﾌﾟｲﾝﾍﾟﾗｷｰ Water Pump Impeller Key	1	1	1	
10-5	3F0-65016-0	ﾎﾟﾝﾌﾟｹｰｽ (ｱｯﾊﾟ) Pump Case (Upper)	1	1	1	
10-6	3F0-65011-0	ﾎﾟﾝﾌﾟｹｰｽﾗｲﾅ Pump Case Liner	1	1	1	
10-7	3F0-65018-0	ﾎﾟﾝﾌﾟｹｰｽｶﾞｽｹｯﾄ (ｱｯﾊﾟ) Pump Case Gasket (Upper)	1	1	1	
10-8	3AB-65025-0	ｳｫｰﾀﾎﾟﾝﾌﾟｶﾞｲﾄﾞﾌﾟﾚｰﾄ Water Pump Guide Plate	1	1	1	
10-9	3F0-65029-0	ﾎﾟﾝﾌﾟｶﾞｲﾄﾞﾌﾟﾚｰﾄｶﾞｽｹｯﾄ Pump Guide Plate Gasket	1	1	1	
10-10	916113-0645	ﾎﾞﾙﾄ Bolt	4	4	4	
10-11	940113-0600	ﾜｯｼｬ Washer	4	4	4	
10-12	941303-0600	ｽﾌﾟﾘﾝｸﾞﾜｯｼｬ Spring Washer	4	4	4	
10-13	3B2-65022-0	ﾀﾞｳｴﾙﾋﾟﾝ、2-11 Dowel Pin, 2-11	2	2	2	
10-14	3F0-65040-1	ﾎﾟﾝﾌﾟｹｰｽ (ﾛﾜ) Pump Case (Lower)	1	1	1	with Bushing & O-ring
10-15	3F0-60223-0	ｵｲﾙｼｰﾙ、10-22-8 Oil Seal, 10-22-8	1	1	1	
10-16	3F0-65020-0	ﾎﾟﾝﾌﾟｹｰｽｶﾞｽｹｯﾄ (ﾛﾜ) Pump Case Gasket (Lower)	1	1	1	
10-17	3AB-65191-0	ｳｫｰﾀﾊﾟｲﾌﾟ　S Water Pipe "S"	1	1	1	for Transom "S"
	3AB-65192-0	ｳｫｰﾀﾊﾟｲﾌﾟ　L Water Pipe "L"	1	1	1	for Transom "L"
10-17-1	3AB-65031-0	ｳｫｰﾀﾊﾟｲﾌﾟｸﾞﾛﾒｯﾄ (ｱｯﾊﾟ) * Water Pipe Grommet (Upper)	1	1	1	
10-18	3F0-65032-0	ｳｫｰﾀﾊﾟｲﾌﾟｸﾞﾛﾒｯﾄ (ﾛﾜ) Water Pipe Grommet (Lower)	1	1	1	
10-19	3F0-64321-0	ｽﾍﾟｰｻ、10.1-15-72 Spacer, 10.1-15-72	1	1	1	

ギヤケース（プロペラシャフト）
Fig. 11 GEAR CASE (PROPELLER SHAFT)

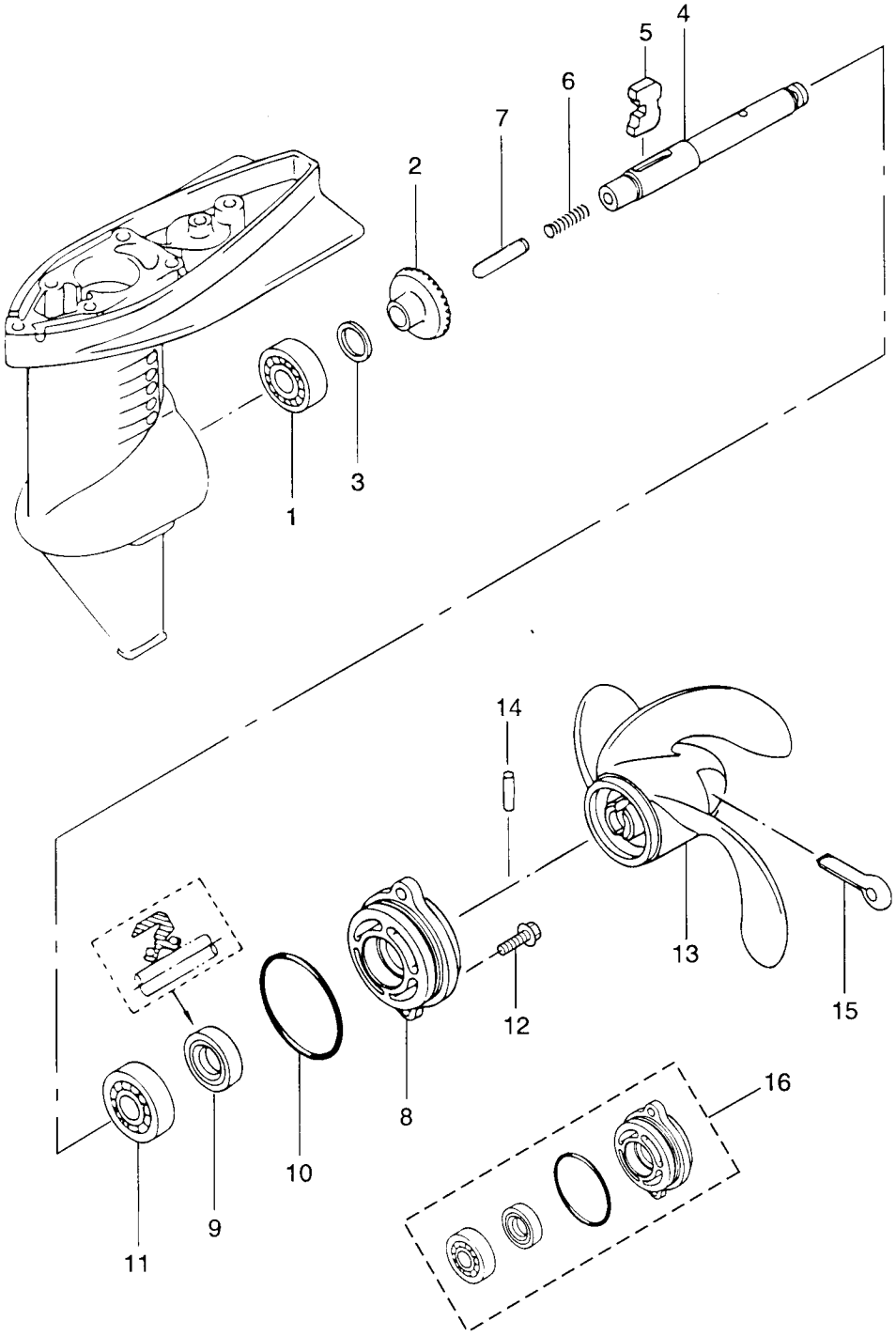

見出番号 Ref. No.	部品番号 Part No.	部　品　名 Description	個数 Q'ty F 3.5 A	F 2.5 A	F 2 A	備　考 Remarks
11-1	9601-0-6004	ﾎﾞｰﾙﾍﾞｱﾘﾝｸﾞ、6004 Ball Bearing, 6004	1	1	1	
11-2	369-64010-2	ﾍﾞﾍﾞﾙｷﾞﾔ A Bevel Gear "A"	1	1	1	
11-3	369-64014-0	ｼﾑ、21-28-0.1 Shim, 21-28-0.1	AR	AR	AR	
	369-64015-0	ｼﾑ、21-28-0.15 Shim, 21-28-0.15	AR	AR	AR	
11-4	3F0-64211-0	ﾌﾟﾛﾍﾟﾗｼｬﾌﾄ Propeller Shaft	1	1	1	
11-5	3F0-64215-0	ｸﾗｯﾁ Clutch	1	1	1	
11-6	3F0-64221-0	ｸﾗｯﾁｽﾌﾟﾘﾝｸﾞ Clutch Spring	1	1	1	
11-7	3F0-64223-0	ｸﾗｯﾁﾌﾟｯｼｭﾛｯﾄﾞ Clutch Push Rod	1	1	1	
11-8	3F0Q60101-1	ﾌﾟﾛﾍﾟﾗｼｬﾌﾄﾊｳｼﾞﾝｸﾞ Propeller Shaft Housing	1	1	1	
11-9	309-60111-0	ｵｲﾙｼｰﾙ、12-24-8 Oil Seal, 12-24-8	1	1	1	
11-10	345-65015-0	O ﾘﾝｸﾞ、3.2-47 O-Ring, 3.2-47	1	1	1	
11-11	9601-0-6001	ﾎﾞｰﾙﾍﾞｱﾘﾝｸﾞ、6001 Ball Bearing, 6001	1	1	1	
11-12	910113-5620	ﾎﾞﾙﾄ Bolt	2	2	2	
11-13	3F0-64101-0	ﾌﾟﾛﾍﾟﾗ 7(樹脂)、3×188×178 Propeller 7(Plastic), 3×7.4×7.0	1	1	1	for Transom "S", "L"
	3F0-64102-0	ﾌﾟﾛﾍﾟﾗ 6(ｱﾙﾐ)、3×188×145 Propeller 6(Aluminum), 3×7.4×5.7	1	1	1	Option
	309-64106-0	ﾌﾟﾛﾍﾟﾗ 6(樹脂)、3×188×145 Propeller 6(Plastic), 3×7.4×5.7	1	1	1	Option
	314-64103-0	ﾌﾟﾛﾍﾟﾗ 4.5(樹脂)、3×188×110 Propeller 4.5(Plastic), 3×7.4×4.3	1	1	1	Option
11-14	309-64126-0	ｼｬｰﾋﾟﾝ、4-24 Shear Pin, 4-24	1	1	1	
11-15	951503-0435	ｽﾌﾟﾘｯﾄﾋﾟﾝ、4-35 Split Pin, 4-35	1	1	1	
11-16	3F0Q87323-1	ﾌﾟﾛﾍﾟﾗｼｬﾌﾄﾊｳｼﾞﾝｸﾞｱｯｼ Propeller Shaft Housing Ass'y	1	1	1	

シフト
Fig. 12 SHIFT

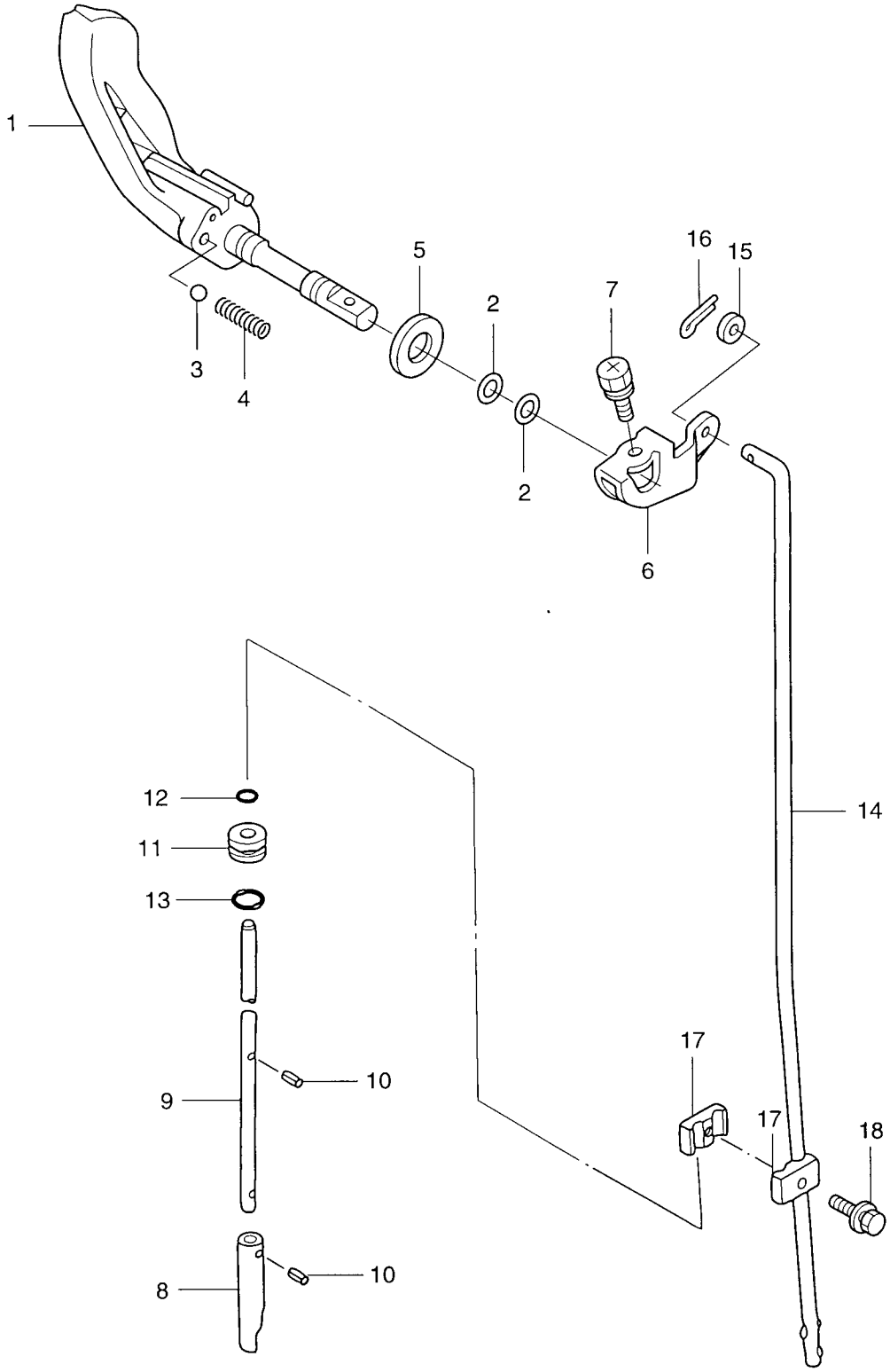

見出番号 Ref. No.	部品番号 Part No.	部　品　名 Description	個数 Q'ty F 3.5 A	F 2.5 A	F 2 A	備　考 Remarks
12-1	3AB-66130-0	ｼﾌﾄﾚﾊﾞｰ Shift Lever	1	1	1	
12-2	345-66021-0	O ﾘﾝｸﾞ、1.9-6.8 O-Ring, 1.9-6.8	2	2	2	
12-3	369-66116-0	ｾﾗﾐｯｸﾎﾞｰﾙ、7.7 Ceramic Ball, 7.7	1	1	1	
12-4	369-66112-1	ｼﾌﾄﾚﾊﾞｰｽﾄｯﾊﾟｽﾌﾟﾘﾝｸﾞ Shift Lever Stopper Spring	1	1	1	
12-5	332-61315-0	ﾜｯｼｬ、10.5-18-1.5 Washer, 10.5-18-1.5	1	1	1	
12-6	3AB-66225-0	ｼﾌﾄﾛｯﾄﾞﾚﾊﾞｰ Shift Rod Lever	1	1	1	
12-7	910903-6512	ﾎﾞﾙﾄ Bolt	1	1	1	
12-8	3F0-66011-0	ｸﾗｯﾁｶﾑ Clutch Cam	1	1	1	
12-9	3F0-66012-0	ｶﾑﾛｯﾄﾞ S Cam Rod "S"	1	1	1	for Transom "S"
	3F0-66013-0	ｶﾑﾛｯﾄﾞ L Cam Rod "L"	1	1	1	for Transom "L"
12-10	951407-0308	ｽﾌﾟﾘｸﾞﾋﾟﾝ、3-8 Spring Pin, 3-8	2	2	2	
12-11	3F0-66031-0	ｶﾑﾛｯﾄﾞﾌﾞｯｼﾝｸﾞ Cam Rod Bushing	1	1	1	
12-12	369-66021-1	O ﾘﾝｸﾞ、2.5-4.9 O-Ring, 2.5-4.9	1	1	1	
12-13	301-66023-0	O ﾘﾝｸﾞ、2.4-9.5 O-Ring, 2.4-9.5	1	1	1	
12-14	3AB-66214-0	ｼﾌﾄﾛｯﾄﾞ Shift Rod	1	1	1	
12-15	940113-0600	ﾜｯｼｬ Washer	1	1	1	
12-16	951503-0212	ｽﾌﾟﾘｯﾄﾋﾟﾝ、2-12 Split Pin, 2-12	1	1	1	
12-17	369-66241-0	ｼﾌﾄﾛｯﾄﾞｼﾞｮｲﾝﾄ Shift Rod Joint	1 set	1 set	1 set	
12-18	910113-5616	ﾎﾞﾙﾄ Bolt	1	1	1	or 910103-5616

クランプブラケット、スイベルブラケット

Fig. 13 CLAMP BRACKET, SWIVEL BRACKET

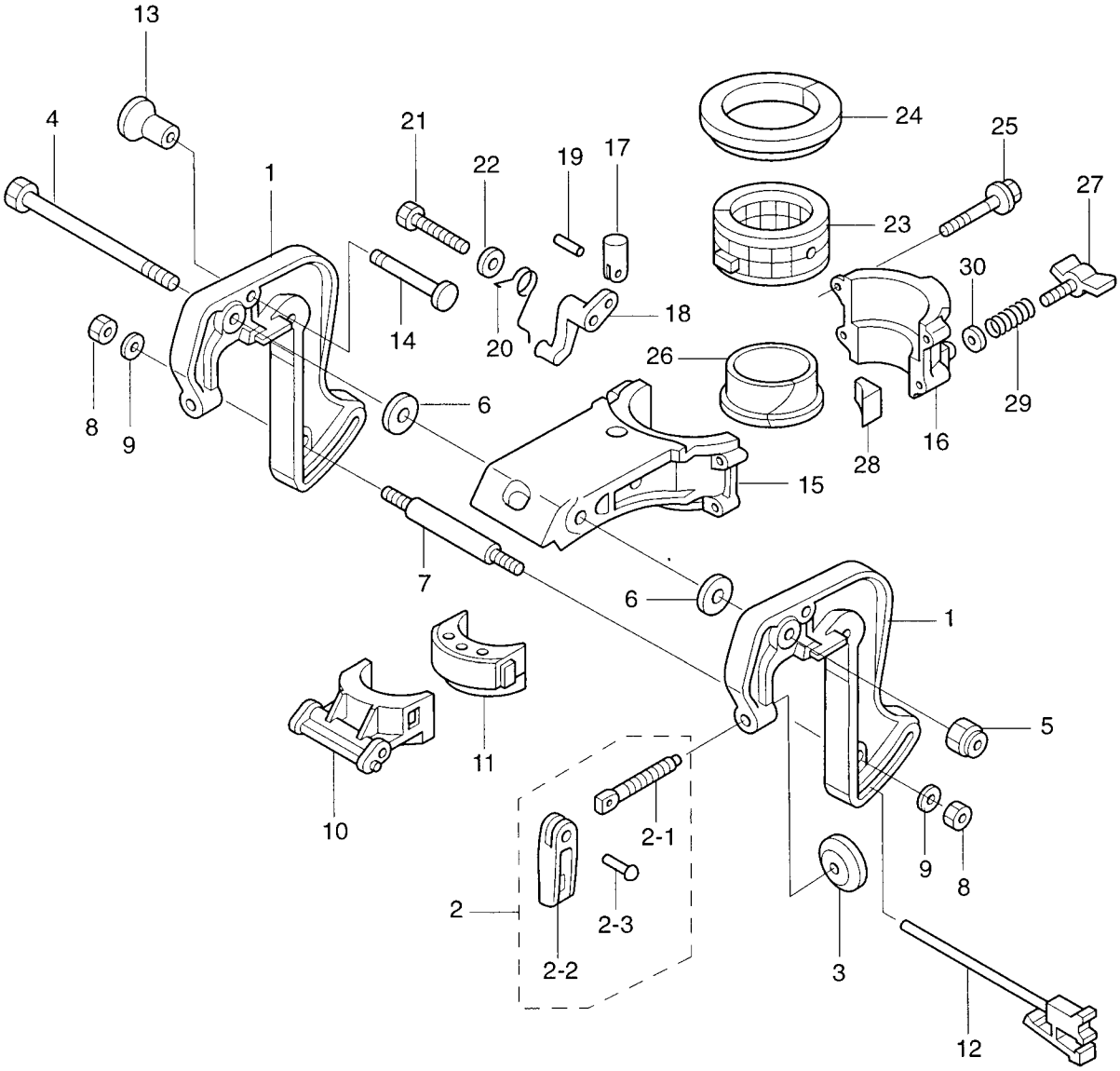

見出番号 Ref. No.	部品番号 Part No.	部　品　名 Description	個数 Q'ty F 3.5 A	F 2.5 A	F 2 A	備　考 Remarks
13-1	3ABQ62111-0	ｸﾗﾝﾌﾟﾌﾞﾗｹｯﾄ Clamp Bracket	2	2	2	
13-2	3AB-62100-0	ｸﾗﾝﾌﾟｽｸﾘｭｱｯｼ Clamp Screw Ass'y	2	2	2	
13-2-1	369-62103-0	ｸﾗﾝﾌﾟｽｸﾘｭ * Clamp Screw	2	2	2	
13-2-2	3AB-62102-0	ｸﾗﾝﾌﾟｽｸﾘｭﾊﾝﾄﾞﾙ * Clamp Screw Handle	2	2	2	
13-2-3	3C8-62104-1	ﾘﾍﾞｯﾄ、3-22 * Rivet, 3-22	2	2	2	
13-3	332-62101-0	ｸﾗﾝﾌﾟｽｸﾘｭﾊﾟｯﾄﾞ Clamp Screw Pad	2	2	2	
13-4	309-62115-2	ﾎﾞﾙﾄ、8-122 Bolt, 8-122	1	1	1	
13-5	930446-0800	ﾅｲﾛﾝﾅｯﾄ、8-P1.25 Nylon Nut, 8-P1.25	1	1	1	or 930403-0800
13-6	307-62116-1	ﾜｯｼｬ、8.5-28-1 Washer, 8.5-28-1	2	2	2	
13-7	309-62118-0	ﾃﾞｨｽﾀﾝｽﾋﾟｰｽ Distance Piece	1	1	1	
13-8	930113-0600	ﾅｯﾄ Nut	2	2	2	
13-9	940113-0600	ﾜｯｼｬ Washer	2	2	2	
13-10	3AB-62212-0	ｽﾗｽﾄｻﾎﾟｰﾀ Thrust Supporter	1	1	1	
13-11	3AB-61336-0	ﾀﾞﾝﾊﾟ(ﾛﾜ) Damper (Lower)	1	1	1	
13-12	3F0-62160-0	ｽﾗｽﾄﾛｯﾄﾞ Thrust Rod	1	1	1	
13-13	309-62463-0	ﾁﾙﾄｽﾄｯﾊﾟﾉﾌﾞ Tilt Stopper Knob	1	1	1	
13-14	309-62464-0	ﾁﾙﾄｽﾄｯﾊﾟ Tilt Stopper	1	1	1	
13-15	3ABQ62391-0	ｽｲﾍﾞﾙﾌﾞﾗｹｯﾄ A Swivel Bracket "A"	1	1	1	
13-16	3ABQ62392-0	ｽｲﾍﾞﾙﾌﾞﾗｹｯﾄ B Swivel Bracket "B"	1	1	1	
13-17	3AB-66334-0	ｽﾄｯﾊﾟ Stopper	1	1	1	
13-18	3AB-63068-0	ﾚﾊﾞｰ Lever	1	1	1	
13-19	951403-0212	ｽﾌﾟﾘﾝｸﾞﾋﾟﾝ、2-12 Spring Pin, 2-12	1	1	1	
13-20	3AB-66336-0	ｽﾌﾟﾘﾝｸﾞ Spring	1	1	1	
13-21	916113-0650	ﾎﾞﾙﾄ Bolt	1	1	1	
13-22	940113-0600	ﾜｯｼｬ Washer	1	1	1	
13-23	393-62416-0	ｽﾃｱﾘﾝｸﾞﾌﾞｯｼﾝｸﾞ Steering Busing	1	1	1	
13-24	3H6-62325-0	ｽﾗｽﾄﾌﾞｯｼﾝｸﾞ Thrust Bushing	1	1	1	
13-25	3V1-60001-0	ﾎﾞﾙﾄ、6-35 ﾌﾟﾚｺｰﾄ Bolt, 6-35 Precoated	4	4	4	
13-26	309-62321-1	ﾋﾟﾎﾞｯﾄﾌﾞｯｼﾝｸﾞ Pivot Bushing	1	1	1	
13-27	309Q62442-2	ﾌﾘｸｼｮﾝﾌﾟﾚｰﾄｽｸﾘｭ Friction Plate Screw	1	1	1	

クランプブラケット、スイベルブラケット

Fig. 13 CLAMP BRACKET, SWIVEL BRACKET

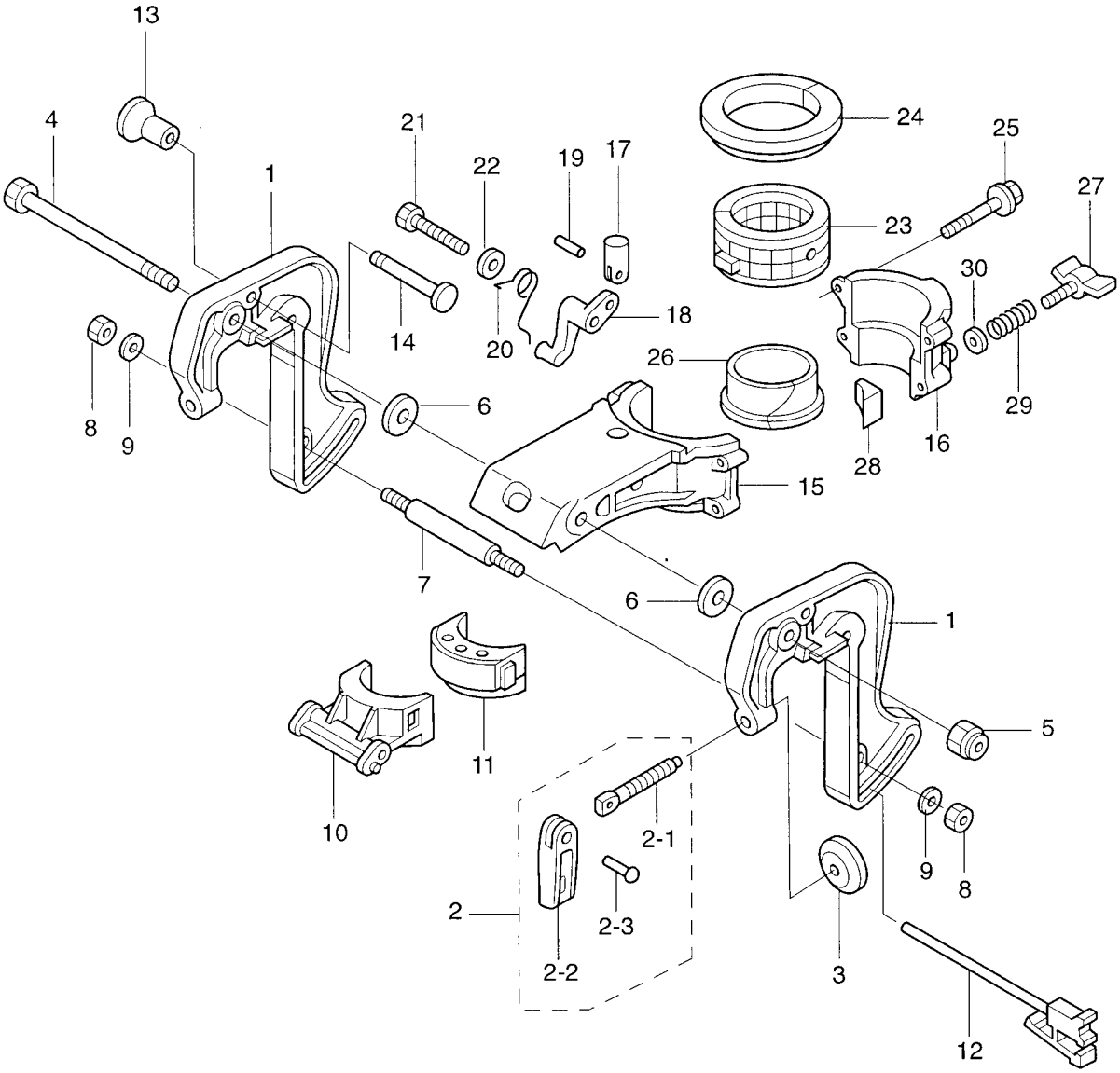

見出番号 Ref. No.	部品番号 Part No.	部　品　名 Description	個数 Q'ty F 3.5 A	F 2.5 A	F 2 A	備　考 Remarks
13-28	309-62441-2	ﾌﾘｸｼｮﾝﾌﾟﾚｰﾄ Friction Plate	1	1	1	
13-29	309-62446-1	ﾌﾘｸｼｮﾝｽﾌﾟﾘﾝｸﾞ Friction Spring	1	1	1	
13-30	940113-0600	ﾜｯｼｬ Washer	1	1	1	

インテグラルフュエルタンク

Fig. 14 INTEGRAL FUEL TANK

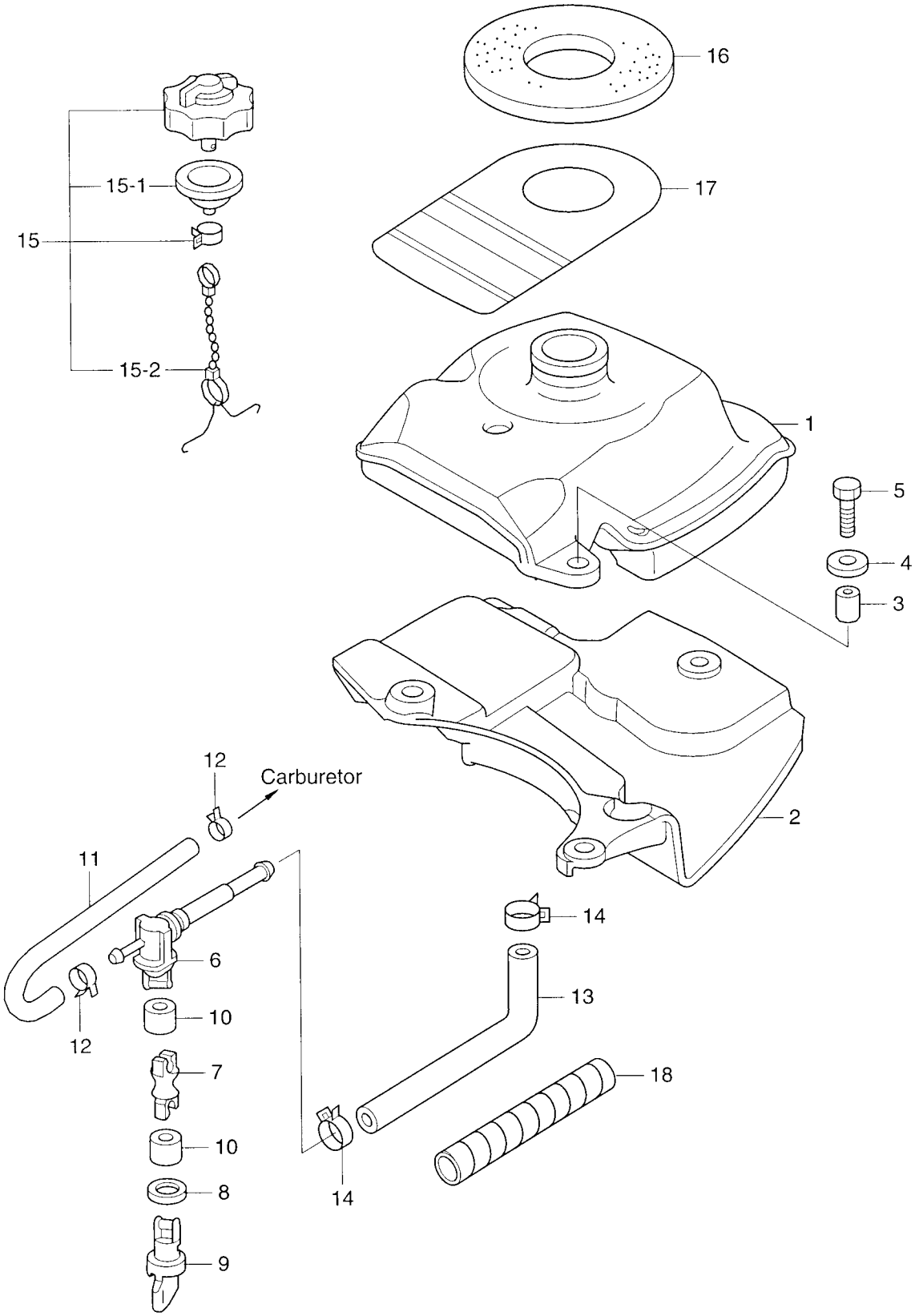

見出番号 Ref. No.	部品番号 Part No.	部　品　名 Description	個数 Q'ty F 3.5 A	F 2.5 A	F 2 A	備　考 Remarks
14-1	3AB-70310-0	ﾌｭｴﾙﾀﾝｸ Fuel Tank	1	1	1	
14-2	3AB-06846-0	ﾌｭｴﾙﾀﾝｸｶﾊﾞｰ Fuel Tank Cover	1	1	1	
14-3	3T5-76079-0	ｶﾗｰ、6.2-9-10.7 Collar, 6.2-9-10.7	3	3	3	
14-4	3R0-66308-0	ﾜｯｼｬ、6-16-1.5 Washer, 6-16-1.5	3	3	3	or 3C8-66308-0
14-5	910113-0625	ﾎﾞﾙﾄ Bolt	3	3	3	
14-6	369-70311-0	ﾌｭｴﾙｺｯｸ Fuel Cock	1	1	1	
14-7	3AB-70061-0	ﾌｭｴﾙｺｯｸﾛｯﾄﾞ Fuel Cock Rod	1	1	1	
14-8	369-70063-0	ｼｰﾙﾘﾝｸﾞ Seal Ring	1	1	1	
14-9	369-70062-0	ﾌｭｴﾙｺｯｸﾉﾌﾞ Fuel Cock Knob	1	1	1	
14-10	353-72544-0	ﾌｭｴﾙｺｯｸﾛｯﾄﾞﾎｰｽ Fuel Cock Rod Hose	2	2	2	
14-11	3AB-70326-0	ﾌｭｴﾙﾎｰｽ Fuel Hose	1	1	1	
14-12	121-35143-0	ｸﾘｯﾌﾟ、φ9.5 Clip, φ9.5	2	2	2	
14-13	3AB-70325-0	ﾌｭｴﾙﾎｰｽ Fuel Hose	1	1	1	
14-14	3AB-02215-0	ｸﾘｯﾌﾟ、φ15 Clip, φ15	2	2	2	
14-15	3R6-70320-0	ﾌｭｴﾙﾀﾝｸｷｬｯﾌﾟ Fuel Tank Cap	1	1	1	
14-15-1	309-70021-3	ﾀﾝｸｷｬｯﾌﾟｶﾞｽｹｯﾄ * Tank Cap Gasket	1	1	1	
14-15-2	3C8-71017-0	ﾀﾝｸｷｬｯﾌﾟﾌｯｸ * Tank Cap Hook	1	1	1	
14-16	3AB-70036-0	ﾌｭｴﾙﾀﾝｸｼｰﾙ Fuel Tank Seal	1	1	1	
14-17	3AB-72183-0	ｺｰｼｮﾝﾀｸﾞ B Caution Tag "B"	1	1	1	
14-18	3V1-76148-0	ｽﾊﾟｲﾗﾙﾁｭｰﾌﾞ（φ10-100） Spairal Tube（φ10-100）	1	1	1	

カウル
Fig. 15 COWL

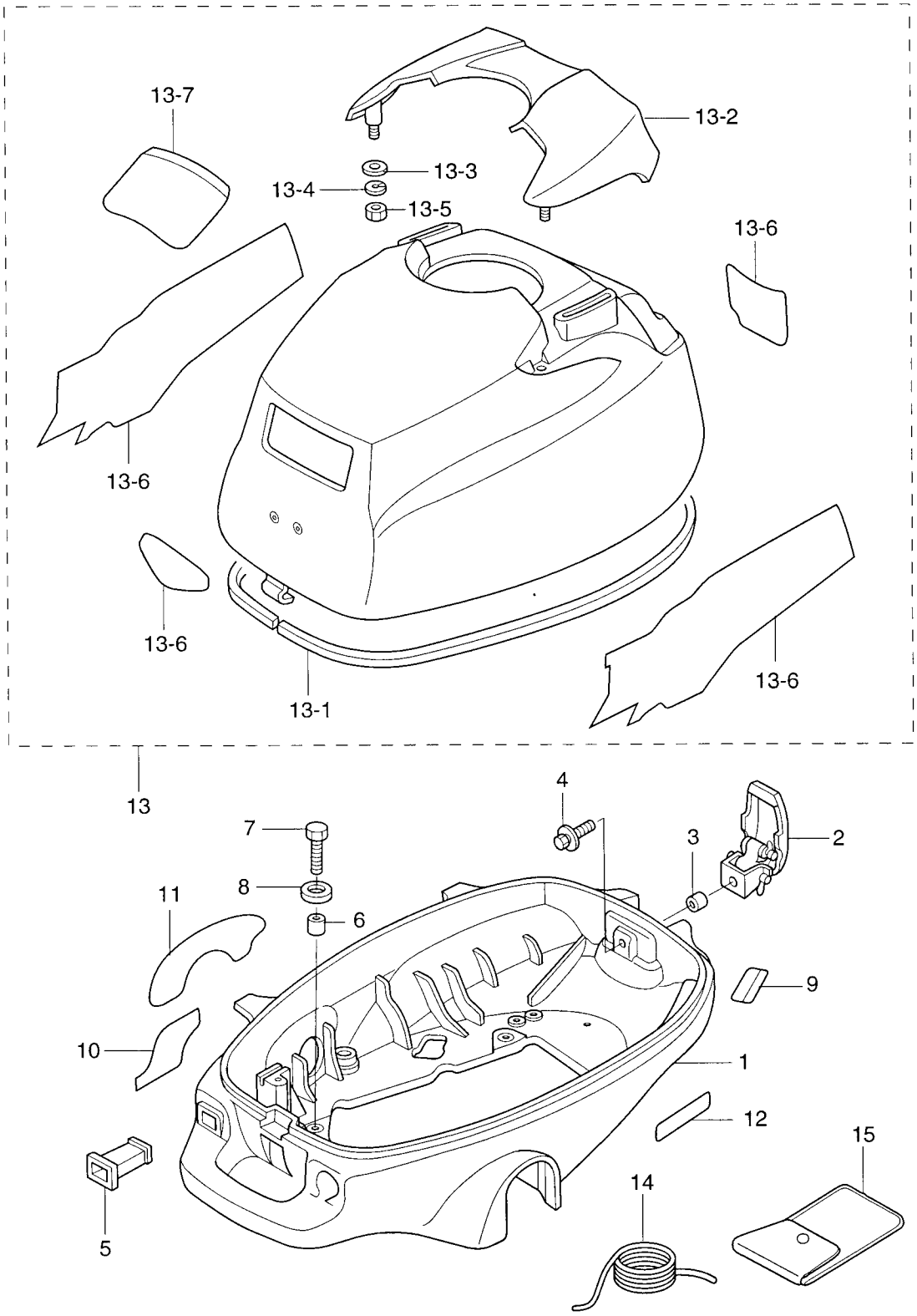

見出番号 Ref. No.	部品番号 Part No.	部　品　名 Description	個数 Q'ty F 3.5 A	F 2.5 A	F 2 A	備　考 Remarks
15-1	3ABQ67100-0	ﾎﾞﾄﾑｶｳﾙ Bottom Cowl	1	1	1	
15-2	3V1-67120-0	ｶｳﾙﾗｯﾁ Cowl Latch	1	1	1	
15-3	3A0-76079-0	ｶﾗｰ、6.2-9-7.4 Collar, 6.2-9-7.4	1	1	1	
15-4	910113-5616	ﾎﾞﾙﾄ Bolt	1	1	1	
15-5	3AB-67104-0	ﾁｮｰｸﾛｯﾄﾞﾌﾞｯｼﾝｸﾞ Choke Rod Bushing	1	1	1	
15-6	353-06283-0	ｶﾗｰ、6.4-10-4.7 Collar, 6.4-10-4.7	4	4	4	
15-7	910113-0616	ﾎﾞﾙﾄ Bolt	4	4	4	
15-8	3R0-66308-0	ﾜｯｼｬ、6-16-1.5 Washer, 6-16-1.5	4	4	4	or 3C8-66308-0
15-9	3H6-72026-0	ｽﾊﾟｰｸﾌﾟﾗｸﾞﾃﾞｶﾙ (ﾚｼﾞｽﾀﾝｽ) Spark Plug Decal (with Resistance)	1	1	1	
15-10	3AB-67578-0	ｼﾌﾄﾃﾞｶﾙ (F-N) Shift Decal (F-N)	1	1	1	
15-11	3AB-72024-0	ﾌｭｴﾙﾚﾊﾞｰﾃﾞｶﾙ Fuel Lever Decal	1	1	1	
15-12	3AB-67572-0	ｽﾄｰﾘｯｼﾞﾃﾞｶﾙ Storage Decal	1	1	1	
15-13	3BRQ67630-0	ﾄｯﾌﾟｶｳﾙ Top Cowl	1	1	1	UNIQUE
15-13-1	3AB-67501-0	ﾄｯﾌﾟｶｳﾙｼｰﾙ * Top Cowl Seal	1	1	1	L=1100
15-13-2	3ABQ67521-0	ﾁﾙﾄﾊﾝﾄﾞﾙ * Tilt Handle	1	1	1	
15-13-3	940113-0600	ﾜｯｼｬ * Washer	4	4	4	or 940103-0600
15-13-4	941303-0600	ｽﾌﾟﾘﾝｸﾞﾜｯｼｬ * Spring Washer	4	4	4	
15-13-5	930113-0600	ﾅｯﾄ * Nut	4	4	4	or 930103-0600
15-13-6	3BRQ87801-0	ﾃﾞｶﾙｾｯﾄ * Decal Set	1 set	-	-	UNIQUE
	3ABQ87801-0	ﾃﾞｶﾙｾｯﾄ * Decal Set	-	1 set	-	
	3BVQ87801-0	ﾃﾞｶﾙｾｯﾄ * Decal Set	-	-	1 set	UNIQUE
15-13-7	3R0-72180-0	ｺｰｼｮﾝﾃﾞｶﾙ A * Caution Decal "A"	1	1	1	
15-14	312-72201-0	ﾛｰﾌﾟ Rope	1	1	1	φ4-1000
15-15	3H6-72100-0	ﾂｰﾙ Tool	1	1	1	

オプショナルパーツ＆アクセサリー

Fig. 16 OPTIONAL PARTS & ACCESSORIES

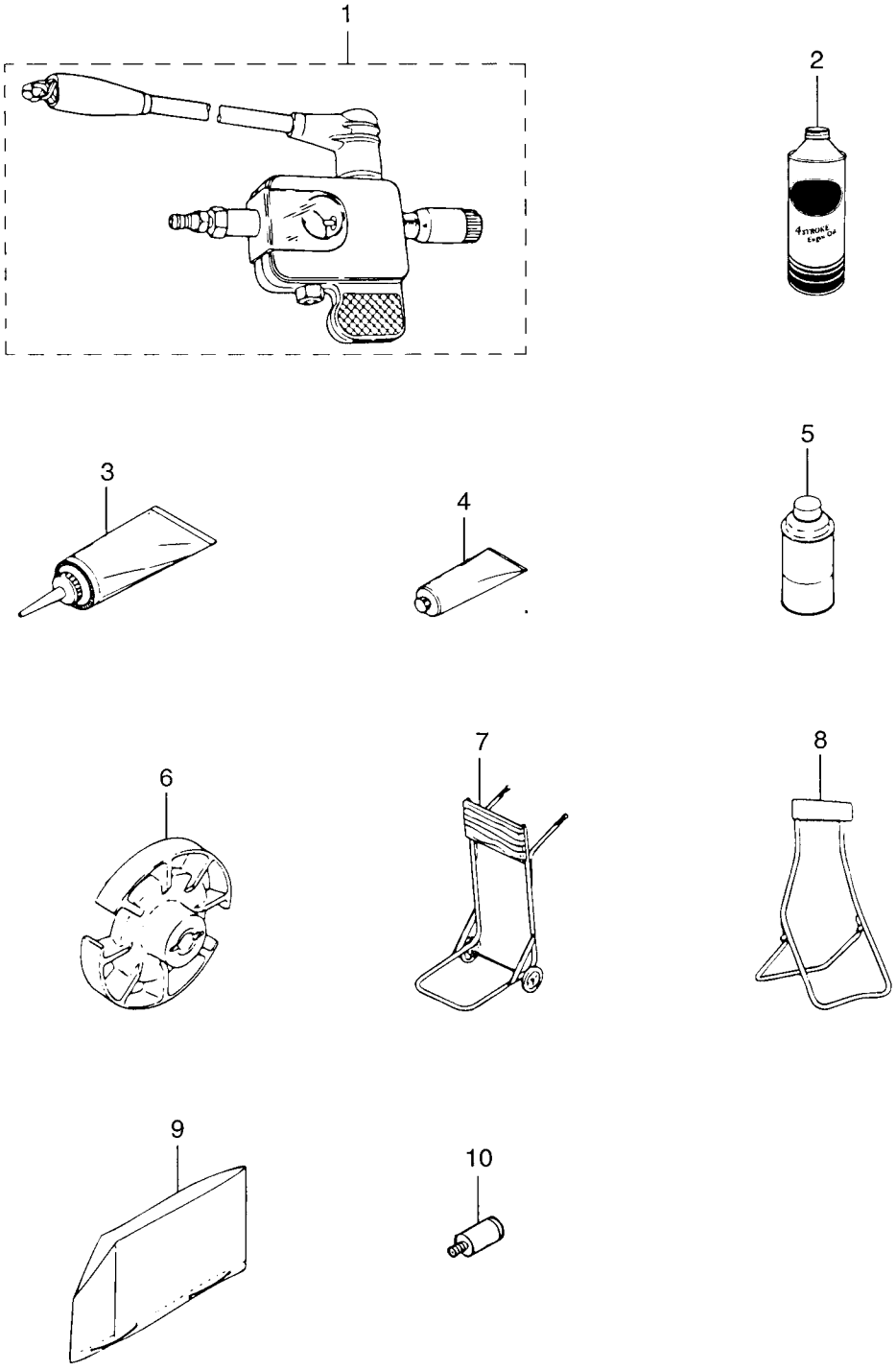

見出番号 Ref. No.	部品番号 Part No.	部　品　名 Description	個数 Q'ty F 3.5 A	F 2.5 A	F 2 A	備　考 Remarks
16-1	3F3-72540-0	ｽﾊﾟｰｸﾃｽﾀ Spark Tester	1	1	1	
16-2	3AC-72300-0	ｴﾝｼﾞﾝｵｲﾙ (1L) Engine Oil (1L)	1	1	1	N.A.F.N.
16-3	332-72306-0	ｷﾞﾔｵｲﾙ (500mL) Gear Oil (500mL)	1	1	1	20 tubes/case N.A.F.N.
16-4	332-72309-0	ｸﾞﾘｽ (250g) Grease (250g)	1	1	1	24 tubes/case N.A.F.N.
16-5	3AC-72326-0	ｽﾌﾟﾚｰ (ｱｸｱﾏﾘﾝﾌﾞﾙｰ) Touch-up Paint (Aquamarine Blue)	1	1	1	N.A.F.N.
16-6	3F0-64111-0	ﾃｽﾄﾌﾟﾛﾍﾟﾗ Test Propeller	1	1	-	
	3BV-64111-0	ﾃｽﾄﾌﾟﾛﾍﾟﾗ Test Propeller	-	-	1	
16-7	332-72401-0	ｶｰﾄ Cart	1	1	1	
16-8	332-72402-0	ｽﾀﾝﾄﾞ Stand	1	1	1	
16-9	369-72314-0	ﾋﾞﾆｰﾙﾓｰﾀｶﾊﾞｰ (S) Vinyl Motor Cover (S)	1	1	1	UNIQUE
16-10	336-60007-0	ﾌﾗｯｼﾝｸﾞｱﾀｯﾁﾒﾝﾄ Flushing Attachment	1	1	1	

アッセンブリ、キット
Fig. 17 ASSEMBLY, KIT

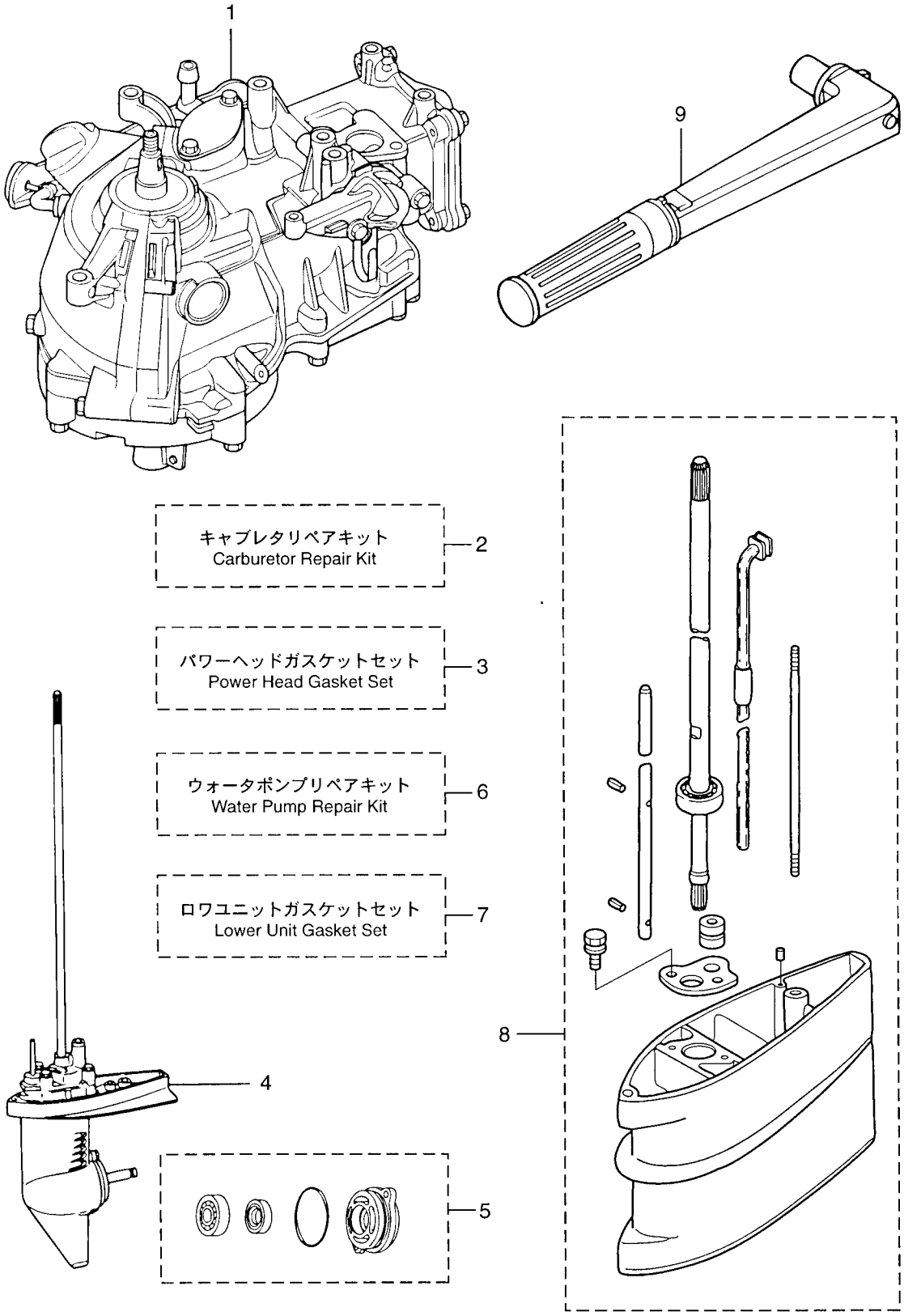

見出番号 Ref. No.	部品番号 Part No.	部　品　名 Description	個数 Q'ty F 3.5 A	F 2.5 A	F 2 A	備　考 Remarks
17-1	3ABB87100-0	ｴﾝｼﾞﾝｼｮｰﾄﾌﾞﾛｯｸ Engine Short Block	1	1	1	
17-2	3AB-87122-0	ｷｬﾌﾞﾚﾀﾘﾍﾟｱｷｯﾄ Carburetor Repair Kit	1 set	1 set	1 set	
	3AB-03231-0	ﾌﾛｰﾄ * Float	1	1	1	Fig. 3-1-4
	3H6-03240-0	ﾌﾛｰﾄﾊﾞﾙﾌﾞ * Float Valve	1	1	1	Fig. 3-1-5
	3H6-03244-0	ｸﾘｯﾌﾟ * Clip	1	1	1	Fig. 3-1-6
	3H6-03232-0	ﾌﾛｰﾄｱｰﾑﾋﾟﾝ * Float Arm Pin	1	1	1	Fig. 3-1-7
	3H6-03222-0	ﾌﾛｰﾄﾁｬﾝﾊﾞ O ﾘﾝｸﾞ * Float Chamber O-Ring	1	1	1	Fig. 3-1-9
	922503-6412	ｽｸﾘｭ * Screw	2	2	2	Fig. 3-1-10
	3H6-03293-0	ﾄﾞﾚﾝｽｸﾘｭ O ﾘﾝｸﾞ * Drain Screw O-Ring	1	1	1	Fig. 3-1-12
17-3	3AB-87121-0	ﾊﾟﾜｰﾍｯﾄﾞｶﾞｽｹｯﾄｾｯﾄ Power Head Gasket Set	1	1	1	
	3AB-01024-0	ﾍｯﾄﾞｶﾊﾞｰｶﾞｽｹｯﾄ * Head Cover Gasket	1	1	1	
	3AB-01032-0	ｻｰﾓｽﾀｯﾄｷｬｯﾌﾟｶﾞｽｹｯﾄ * Thermostat Cap Gasket	1	1	1	
	3AB-07432-0	ﾌﾞﾘｰｻﾞﾁｬﾝﾊﾞｶﾊﾞｰｶﾞｽｹｯﾄ * Breather Chamber Cover Gasket	1	1	1	
	3AB-00121-0	ｵｲﾙｼｰﾙ、20-35-7 * Oil Seal, 20-35-7	2	2	2	Crank Shaft
	3H6-03293-0	ﾄﾞﾚﾝｽｸﾘｭ O ﾘﾝｸﾞ * Drain Screw O-Ring	1	1	1	Carburetor
	3H6-02011-0	ｷｬﾌﾞﾚﾀｶﾞｽｹｯﾄ * Carburetor Gasket	2	2	2	
	3AB-02104-0	ｲﾝﾃｰｸﾏﾆﾎｰﾙﾄﾞｶﾞｽｹｯﾄ * Intake Manifold Gasket	1	1	1	
	3AB-07402-0	ｵｲﾙﾊﾟﾝｶﾞｽｹｯﾄ * Oil Pan Gasket	1	1	1	
	3R0-07422-0	O ﾘﾝｸﾞ、3.1-24.4 * O-Ring, 3.1-24.4	1	1	1	Engine Oil Filler Cap
	3AB-01215-0	ｵｲﾙｼｰﾙ、10.1-20-7 * Oil Seal, 10.1-20-7	2	2	2	Drive Shaft
	3V1-02012-0	O ﾘﾝｸﾞ 2.4-35.2 * O-Ring, 2.4-35.2	1	1	1	Crank Case Head
	3AB-61012-0	ﾄﾞﾗｲﾌﾞｼｬﾌﾄﾊｳｼﾞﾝｸﾞｶﾞｽｹｯﾄ * Drive Shaft Housing Gasket	1	1	1	
17-4	3BMQ87301-0	ﾛﾜﾕﾆｯﾄｱｯｼ S Lower Unit Ass'y "S"	1	1	1	for Transom "S"
	3BMQ87302-0	ﾛﾜﾕﾆｯﾄｱｯｼ L Lower Unit Ass'y "L"	1	1	1	for Transom "L"
17-5	3F0Q87323-1	ﾌﾟﾛﾍﾟﾗｼｬﾌﾄﾊｳｼﾞﾝｸﾞｱｯｼ Propeller Shaft Housing Ass'y	1	1	1	

アッセンブリ、キット
Fig. 17 ASSEMBLY, KIT

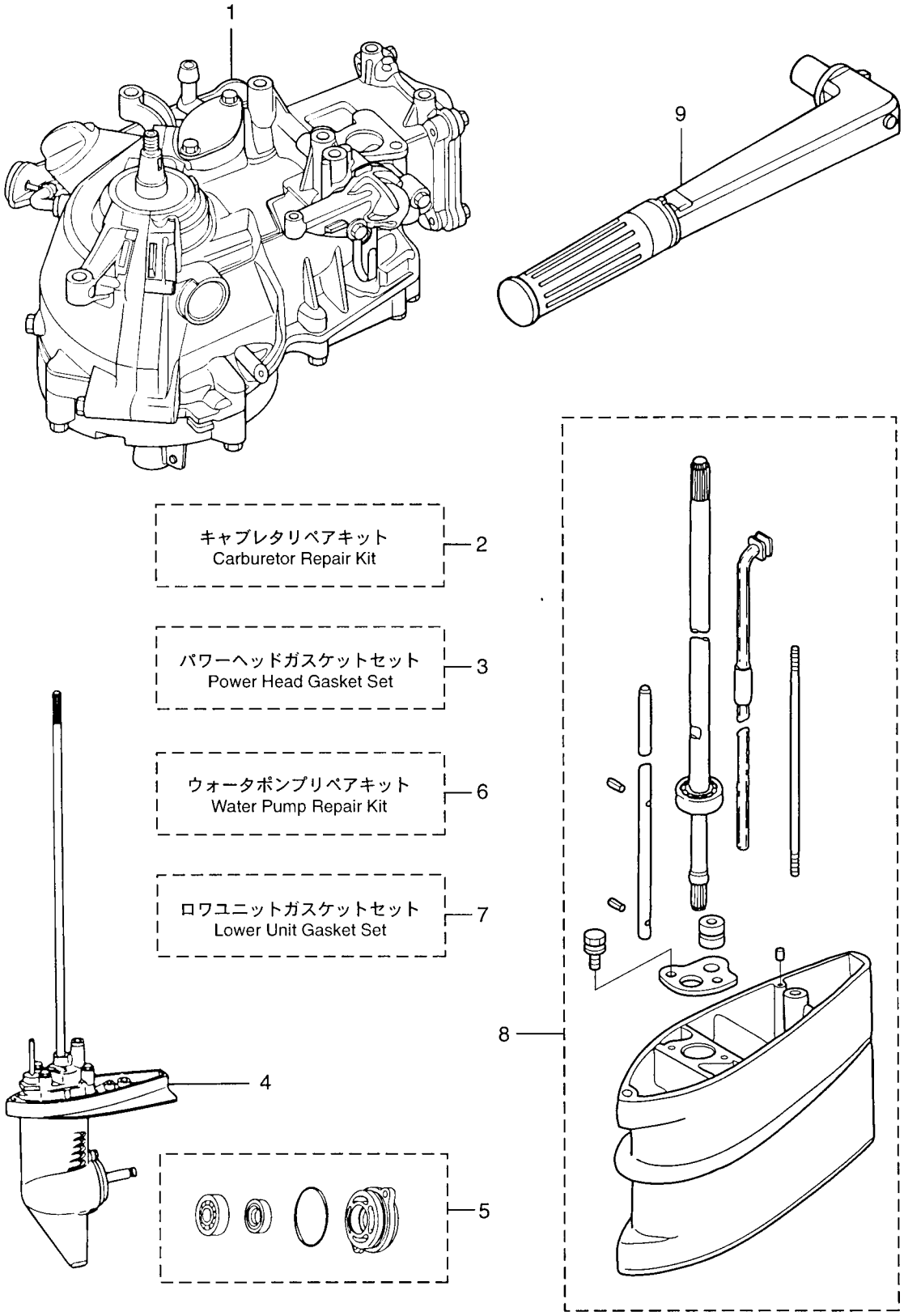

見出番号 Ref. No.	部品番号 Part No.	部　品　名 Description	個数 Q'ty F 3.5 A	F 2.5 A	F 2 A	備　考 Remarks
17-6	3AB-87322-0	ｳｫｰﾀﾎﾟﾝﾌﾟﾘﾍﾟｱｷｯﾄ Water Pump Repair Kit	1 set	1 set	1 set	
	369-65021-1	ｳｫｰﾀﾎﾟﾝﾌﾟｲﾝﾍﾟﾗ * Water Pump Impeller	1	1	1	
	369-65022-0	ｳｫｰﾀﾎﾟﾝﾌﾟｲﾝﾍﾟﾗｷｰ * Water Pump Impeller Key	1	1	1	
	3F0-65011-0	ﾎﾟﾝﾌﾟｹｰｽﾗｲﾅ * Pump Case Liner	1	1	1	
	3F0-65018-0	ﾎﾟﾝﾌﾟｹｰｽｶﾞｽｹｯﾄ (ｱｯﾊﾟ) * Pump Case Gasket (Upper)	1	1	1	
	3AB-65025-0	ｳｫｰﾀﾎﾟﾝﾌﾟｶﾞｲﾄﾞﾌﾟﾚｰﾄ * Water Pump Guide Plate	1	1	1	
	3F0-65029-0	ﾎﾟﾝﾌﾟｶﾞｲﾄﾞﾌﾟﾚｰﾄｶﾞｽｹｯﾄ * Pump Guide Plate Gasket	1	1	1	
17-7	3F0-87321-0	ﾛﾜﾕﾆｯﾄｶﾞｽｹｯﾄｾｯﾄ Lower Unit Gasket Set	1 set	1 set	1 set	
	332-60006-0	ｶﾞｽｹｯﾄ、8.2-14-1 * Gasket, 8.2-14-1	2	2	2	
	369-65021-1	ｳｫｰﾀﾎﾟﾝﾌﾟｲﾝﾍﾟﾗ * Water Pump Impeller	1	1	1	
	369-65022-0	ｳｫｰﾀﾎﾟﾝﾌﾟｲﾝﾍﾟﾗｷｰ * Water Pump Impeller Key	1	1	1	
	3F0-65018-0	ﾎﾟﾝﾌﾟｹｰｽｶﾞｽｹｯﾄ (ｱｯﾊﾟ) * Pump Case Gasket (Upper)	1	1	1	
	3F0-65029-0	ﾎﾟﾝﾌﾟｶﾞｲﾄﾞﾌﾟﾚｰﾄｶﾞｽｹｯﾄ * Pump Guide Plate Gasket	1	1	1	
	3F0-60223-0	ｵｲﾙｼｰﾙ、10-22-8 * Oil Seal, 10-22-8	1	1	1	Pump Case Lower
	3F0-65020-0	ﾎﾟﾝﾌﾟｹｰｽｶﾞｽｹｯﾄ (ﾛﾜ) * Pump Case Gasket (Lower)	1	1	1	
	309-60111-0	ｵｲﾙｼｰﾙ、12-24-8 * Oil Seal, 12-24-8	1	1	1	Propeller Shaft
	345-65015-0	O ﾘﾝｸﾞ、3.2-47 * O-Ring, 3.2-47	1	1	1	Propeller Shaft
	369-66021-1	O ﾘﾝｸﾞ、2.5-4.9 * O-Ring, 2.5-4.9	1	1	1	Cam Rod
	301-66023-0	O ﾘﾝｸﾞ、2.4-9.5 * O-Ring, 2.4-9.5	1	1	1	Bushing
17-8	3ABQ87312-0	ｴｸｽﾃﾝｼｮﾝﾊｳｼﾝｸﾞｷｯﾄ L Extension Housing Kit "L"	1 set	1 set	1 set	for Transom "L"
	3ABQ61100-0	ｴｸｽﾃﾝｼｮﾝﾊｳｼﾞﾝｸﾞ L * Extension Housing " L"	1	1	1	Fig. 9-8
	3AB-60003-0	ﾄﾞﾗｲﾌﾞｼｬﾌﾄﾌﾞｯｼﾝｸﾞ * Drive Shaft Bushing	1	1	1	Fig. 9-9
	3AB-64332-0	ﾄﾞﾗｲﾌﾞｼｬﾌﾄﾌﾞｯｼﾝｸﾞｽﾄｯﾊﾟ * Drive Shaft Bushing Stopper	1	1	1	Fig. 9-10
	172-36008-0	ｸﾞﾛﾒｯﾄ、13-2 * Grommet, 13-2	1	1	1	Fig. 9-11
	910113-5612	ﾎﾞﾙﾄ * Bolt	2	2	2	Fig. 9-12
	3F0-61101-1	ｽﾀｯﾄﾞﾎﾞﾙﾄ、6-171 * Stud Bolt, 6-171	1	1	1	Fig. 9-13
	930113-0600	ﾅｯﾄ * Nut	1	1	1	Fig. 9-14
	3AB-60001-0	ﾎﾞﾙﾄ、6-30 ﾌﾟﾚｺｰﾄ * Bolt, 6-30 Precoated	1	1	1	Fig. 9-15

アッセンブリ、キット
Fig. 17 ASSEMBLY, KIT

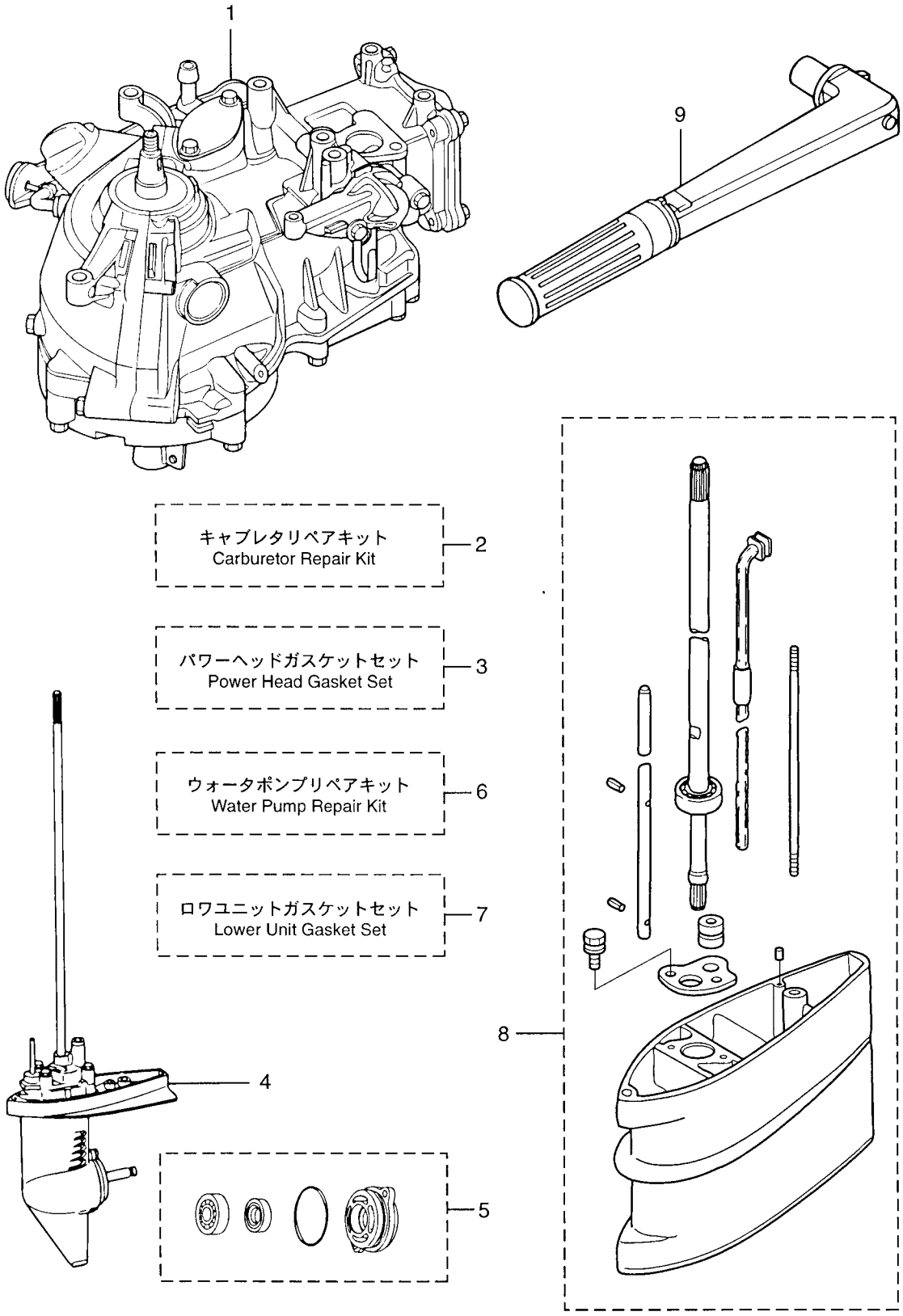

見出番号 Ref. No.	部品番号 Part No.	部　品　名 Description	個数 Q'ty F 3.5 A	F 2.5 A	F 2 A	備　考 Remarks
17-8	3AB-64307-0	ﾄﾞﾗｲﾌﾞｼｬﾌﾄ L * Drive Shaft "L"	1	1	1	Fig. 10-1
	3F0-66013-0	ｶﾑﾛｯﾄﾞ L * Cam Rod "L"	1	1	1	Fig. 12-9
	951407-0308	ｽﾌﾟﾘﾝｸﾞﾋﾟﾝ、3-8 * Spring Pin, 3-8	2	2	2	Fig. 12-10
	3AB-65192-0	ｳｫｰﾀﾊﾟｲﾌﾟ L * Water Pipe "L"	1	1	1	Fig. 10-17
	3AB-01111-0	ﾀﾞｳｴﾙﾋﾟﾝ、6-12 * Dowel Pin, 6-12	1	1	1	Fig. 9-25
17-9	3V1Q63003-0	ﾃｨﾗﾊﾝﾄﾞﾙｱｯｼ Tiller Handle Ass'y	1	1	1	
	3V1Q63011-0	ﾃｨﾗﾊﾝﾄﾞﾙ * Tiller Handle	1	1	1	
	3R3-63012-0	ｸﾞﾘｯﾌﾟ * Grip	1	1	1	
	3H6-63048-0	ｽﾛｯﾄﾙｼｬﾌﾄﾀﾞﾝﾊﾟ * Throttle Shaft Damper	1	1	1	
	3H6-63510-0	ﾌﾞｯｼﾝｸﾞ、14-15.8-7 * Bushing, 14-15.8-7	1	1	1	
	920813-0518	ｽｸﾘｭ * Screw	1	1	1	
	3B2-63063-0	ｽﾛｯﾄﾙｼｬﾌﾄｻﾎﾟｰﾀ * Throttle Shaft Supporter	1	1	1	
	921513-0612	ｽｸﾘｭ * Screw	1	1	1	or 921503-0612
	3V1-63035-0	ﾌﾘｸｼｮﾝﾋﾟｰｽ * Friction Piece	1	1	1	
	3V1-63077-0	ｱｼﾞｬｽﾄﾅｯﾄ * Adjusting Nut	1	1	1	
	3V1-63036-0	ｽﾌﾟﾘﾝｸﾞ * Spring	1	1	1	
	910113-0625	ﾎﾞﾙﾄ * Bolt	1	1	1	
	3V9-72019-0	ｽﾛｯﾄﾙﾃﾞｶﾙ * Throttle Decal	1	1	1	
	3V1-63041-0	ｽﾛｯﾄﾙｼｬﾌﾄ * Throttle Shaft	1	1	1	
	350-67154-0	ﾌﾟﾗｽﾁｯｸﾘﾍﾞｯﾄ、6.5 * Plastic Rivet, 6.5	1	1	1	

TOHATSU

TOHATSU CORPORATION

Address : 5-4,3-chome,Azusawa,Itabashi-ku,
TOKYO,174-0051 JAPAN
Phone : TOKYO (03)3966-3117
FAX : TOKYO (03)3966-2951
E-mail : www.tohatsu.co.jp

PARTS CENTER

Address : 5-4,3-chome,Azusawa,Itabashi-ku,
TOKYO,174-0051 JAPAN
Phone : TOKYO (03)3966-7745
FAX : TOKYO (03)3966-2256

トーハツ船外機
パーツ リスト

PARTS LIST

MFS 2
2.5
3.5

本　社	〒174-0051	東京都板橋区小豆沢3-5-4	03 (3966) 3116
マリン九州	〒816-0092	福岡市博多区東那珂2-10-55	092 (411) 8770
マリン関西	〒530-0043	大阪市北区天満 1-8-27	06 (6358) 2971
マリン中部	〒440-0069	愛知県豊橋市御園町7-12	0532 (54) 5551
マリン関東	〒174-0051	東京都板橋区小豆沢3-5-4	03 (3966) 2222
マリン東北	〒981-1106	仙台市太白区柳生2-23-1	022 (306) 9131
マリン北海道	〒060-0031	札幌市中央区北一条東11丁目22-41	011 (241) 8301

002-21052-0
0604-MH4000